# EG4 FlexBOSS21 System Wiring Diagrams - Version 2.1

## Overview of FlexBOSS21 ESS System Use Cases

## Line Drawings:

## FlexBOSS21 with GridBOSS

1. EG4 FlexBOSS21 with GridBOSS - Basic Architecture

2. EG4 FlexBOSS21 with GridBOSS - Detailed Schematic
   2a. EG4 FlexBOSS21 with GridBOSS - Detailed Schematic (with Notes)

3. FlexBOSS21 with GridBOSS: Options for Utility Lockable Disconnect(s) and Meter Requirements

## FlexBOSS21 without GridBOSS

4. EG4 FlexBOSS21 with Back-Fed Breaker - No Backup - Self Consumption and NEM/TOU only

5. EG4 FlexBOSS21 with Back-fed Breaker and Partial Home Backup

6. EG4 FlexBOSS21 with Supply Side Tap and Partial Home Backup
   6a. EG4 FlexBOSS21 with Supply Side Tap and Partial Home Backup (with Notes)

7. EG4 FlexBOSS21 with Supply Side Tap and Whole Home Backup
   7a. EG4 FlexBOSS21 with Supply Side Tap and Whole Home Backup (with Notes)

8. EG4 FlexBOSS21 with Feeder Tap and Whole Home Backup
   8a. EG4 FlexBOSS21 with Feeder Tap and Whole Home Backup (with Notes)

9. EG4 FlexBOSS21 Off-Grid

**DRAWING SET #FlexBOSS21-V1-1L,** Version 2.1 ©2026 EG4 ELECTRONICS, LLC. ALL RIGHTS RESERVED.
THIS DIAGRAM IS FOR ILLUSTRATIVE PURPOSES ONLY. EG4™ IS NOT RESPONSIBLE FOR ACCURACY. FINAL WIRING DIAGRAMS SHOULD BE GENERATED BY A LICENSED PROFESSIONAL AND APPROVED BY ALL AUTHORITIES HAVING JURISDICTION INCLUDING MUNICIPAL, COUNTY, STATE OR ANY OTHER GOVERNMENT OR REGULATORY ENTITY WHICH REGULATES THE USE OF THIS EQUIPMENT WHERE IT MAY BE INSTALLED.

# Overview of FlexBOSS21 ESS System Use Cases (See Corresponding Drawing #)

## WITHOUT GRIDBOSS

### Grid-Tie Only
#### No Batteries
**Drawing #4 (without battery)**

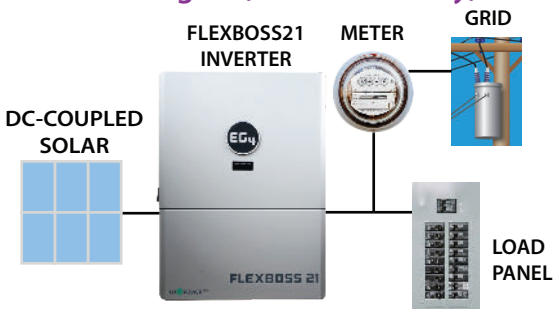


- Maximize Solar Offset
- Low Initial Cost - Simple
- No Storage or add later
- No Solar when Grid down

### Optimize or Minimize NEM
#### No or Critical Loads Backup
**Drawings #4 & 5**

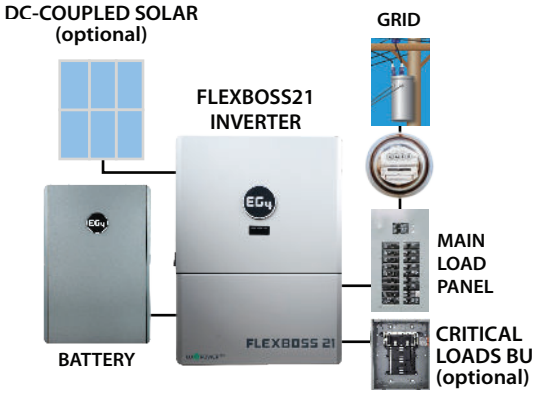


- Minimize Buy & Sell with unfavorable NEM Policy
- Buy Low, Sell High with favorable NEM or TOU Policy
- TOU Capable with or without Solar or Backup Loads

### Off-Grid
**Drawing #9**

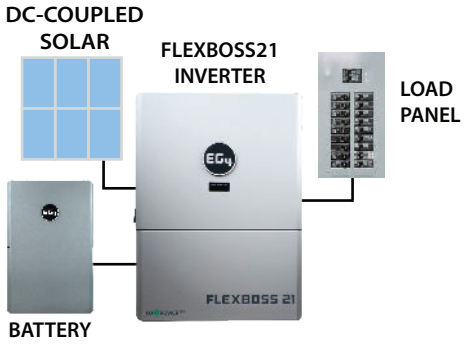


- Remote - No Grid or Seldom Use Grid
- Grid Expensive
- Add Grid Backup Later
- Energy Autonomy

Note: If no utility grid is present or planned then the EG4 6000XP or 12000XP with generator support may better serve this use case.

## WITH GRIDBOSS

### Optimize or Minimize NEM
#### Partial Home or Limited Whole Home Backup
**Drawings #1,2 & 3**

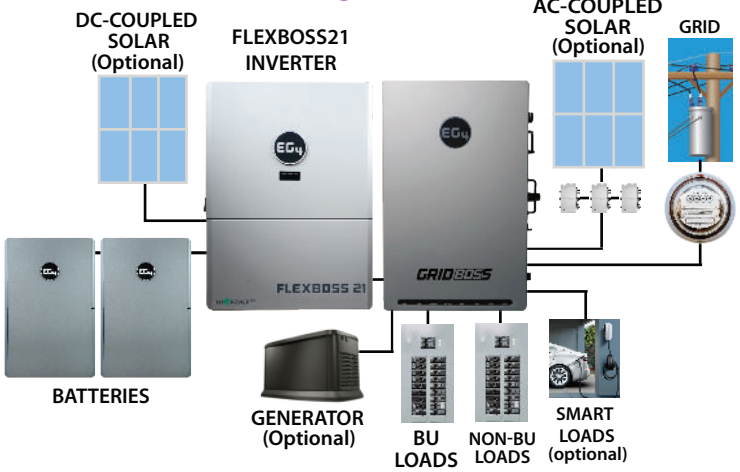


- Utilize Smart Loads to enable Whole Home BU for 1 inverter systems.
- Easily Integrate existing AC Coupled systems and/or Generators.
- Add DC Solar to existing AC Coupled Solar to achieve high Solar Offset.

### Optimize or Minimize NEM - Whole Home Backup
#### Off-Grid Capable for Extended Outages
**Drawings #1,2 & 3**

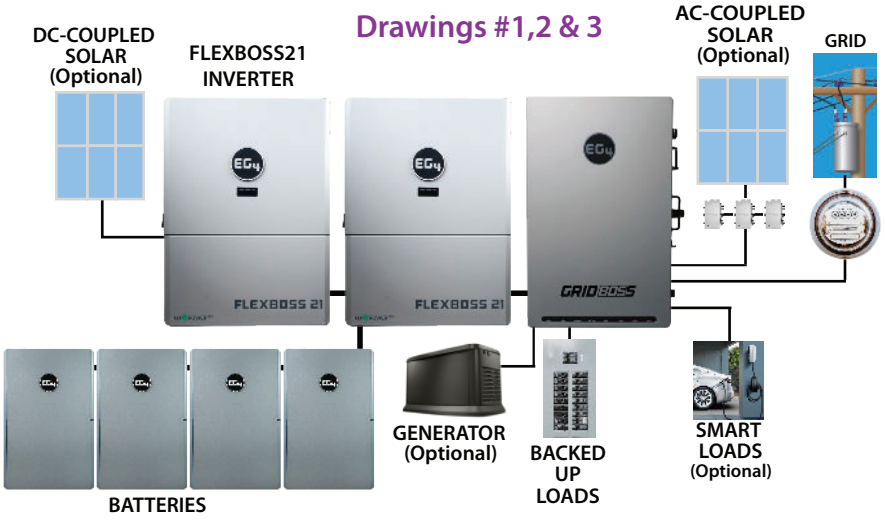


- Utilize Smart Loads to manage battery backup during long outages.
- 2 Inverter systems meets full power needs of 90% of homes, 3 = 200 A Service.
- Provide DC Solar with or without AC Solar to meet full energy needs on or off-grid.

# FlexBOSS21 with GridBOSS

## 1. EG4 FlexBOSS21 and GridBOSS Basic Architecture

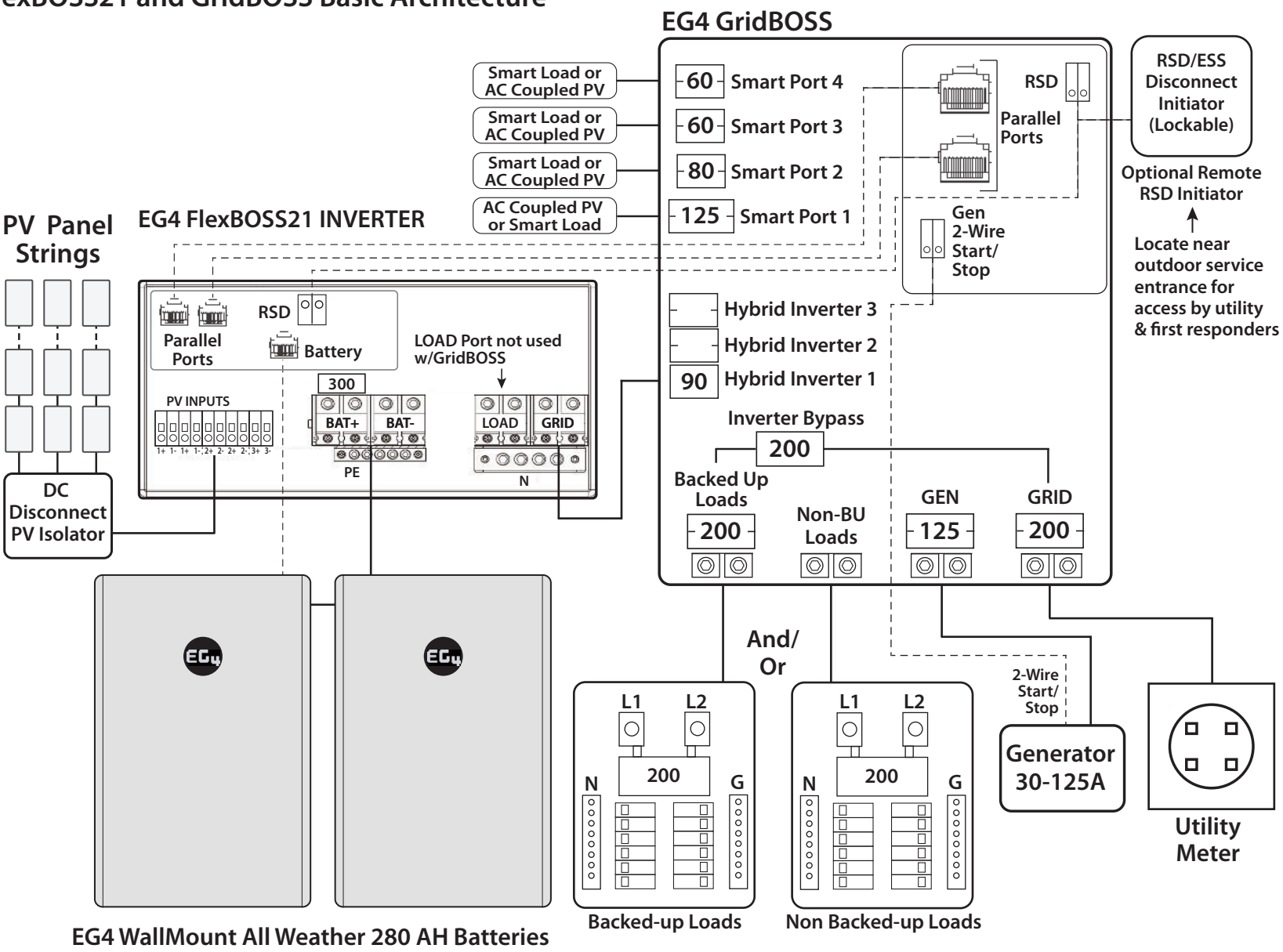


**DRAWING #FlexBOSS21-V1-1L-1,** Version 2.1 ©2026 EG4 ELECTRONICS, LLC. ALL RIGHTS RESERVED.
THIS DIAGRAM IS FOR ILLUSTRATIVE PURPOSES ONLY. EG4™ IS NOT RESPONSIBLE FOR ACCURACY. FINAL WIRING DIAGRAMS SHOULD BE GENERATED BY A LICENSED PROFESSIONAL AND APPROVED BY ALL AUTHORITIES HAVING JURISDICTION INCLUDING MUNICIPAL, COUNTY, STATE OR ANY OTHER GOVERNMENT OR REGULATORY ENTITY WHICH REGULATES THE USE OF THIS EQUIPMENT WHERE IT MAY BE INSTALLED.

# 2. EG4 FlexBOSS21 and GridBOSS - Detailed Schematic

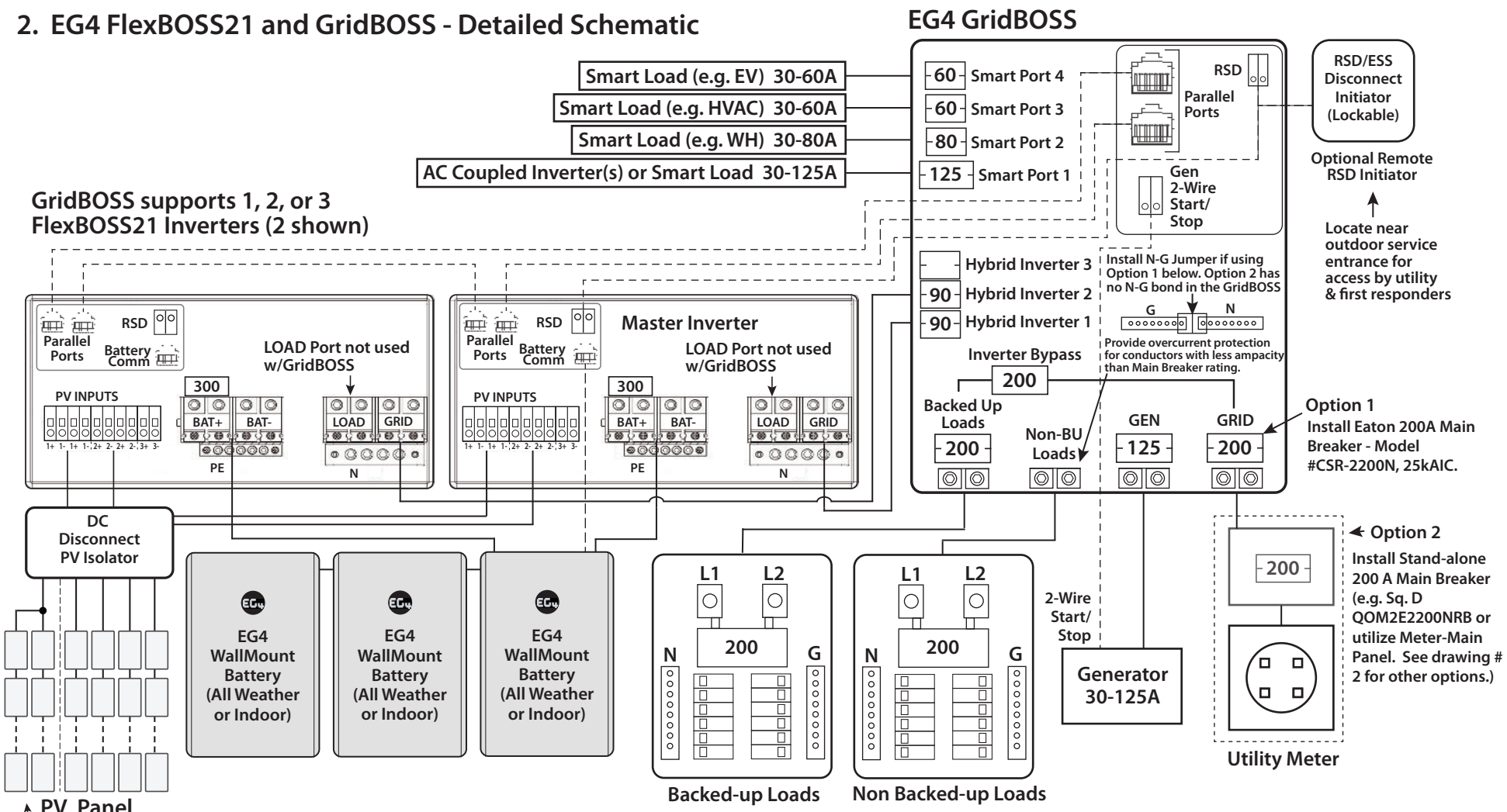


| PV INPUT DATA | |
|---|---|
| NUMBER OF MPPTS | 3 |
| INPUTS PER MPPT | 2 (MPPT 1) \| 2 (MPPT 2) \| 1 (MPPT 3) |
| MAX. USABLE INPUT CURRENT | 26A (MPPT 1) \| 26A (MPPT 2) \| 15A (MPPT 3) |
| MAX. SHORT CIRCUIT INPUT CURRENT | 31A (MPPT 1) \| 31A (MPPT 2) \| 19A (MPPT 3) |
| DC INPUT VOLTAGE RANGE | 100 – 600 VDC |
| UNIT START-UP VOLTAGE | 100 VDC |
| MPPT OPERATING VOLTAGE RANGE | 120 – 440 VDC |
| MAX. UTILIZED SOLAR POWER | 21kW |
| MAX. RECOMMENDED SOLAR INPUT | 25kW |

## FlexBOSS21 AC Specs

| | |
|---|---|
| MAX. OUTPUT CURRENT | 66.7A |
| OUTPUT VOLTAGE | 120/240 VAC; 120/208 VAC (L1/L2/N required) |
| OPERATING VOLTAGE RANGE | 180 – 270 VAC |
| NOMINAL POWER OUTPUT | w/ PV: 16000W @240V \| 13800W @208V<br>w/ out PV: 12000W @240V \| 12000W @208V |
| MAX. AC BYPASS | 90 A |

**DRAWING #FlexBOSS21-V1-1L-2,** Version 2.1 ©2026 EG4 ELECTRONICS, LLC. ALL RIGHTS RESERVED.
THIS DIAGRAM IS FOR ILLUSTRATIVE PURPOSES ONLY. EG4™ IS NOT RESPONSIBLE FOR ACCURACY. FINAL WIRING DIAGRAMS SHOULD BE GENERATED BY A LICENSED PROFESSIONAL AND APPROVED BY ALL AUTHORITIES HAVING JURISDICTION INCLUDING MUNICIPAL, COUNTY, STATE OR ANY OTHER GOVERNMENT OR REGULATORY ENTITY WHICH REGULATES THE USE OF THIS EQUIPMENT WHERE IT MAY BE INSTALLED.

# 2a. EG4 FlexBOSS21 and GridBOSS - Detailed Schematic (with Notes)

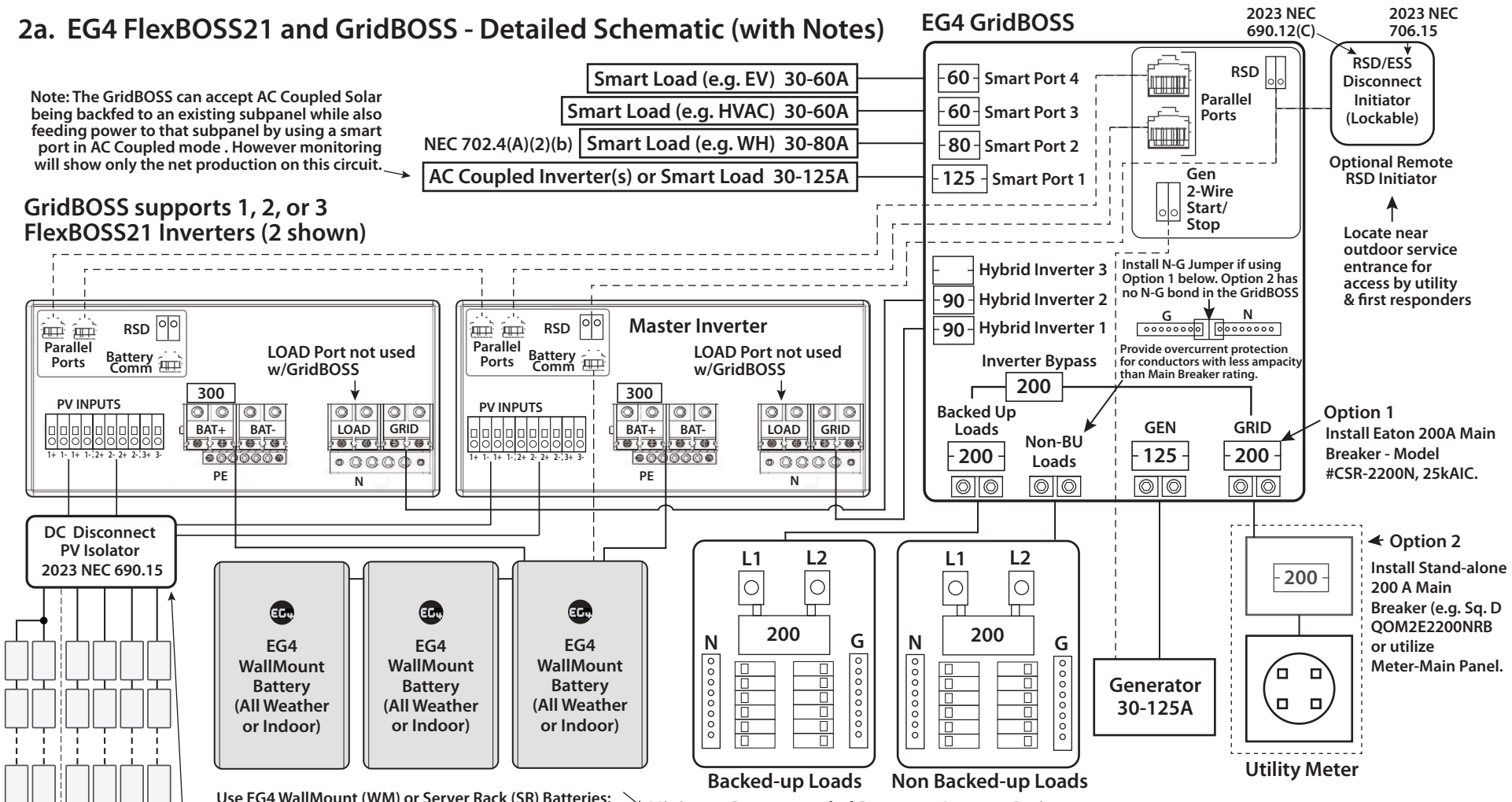


Use EG4 WallMount (WM) or Server Rack (SR) Batteries:

- Up to 6 PowerPro WM (280AH) batteries for 1-3 EG4 Inverters can utilize internal bus bars with no need for external bus bars or fusing.
- Up to12 standard Server Rack batteries in 2 EG4 6-high racks can utilize the rack bus bars with no need for external bus bars or fusing.

For larger battery configurations:

- Utilize "Disable Shared Battery" mode to avoid excessive battery cabling and to avoid paralleling more than 6 WM batteries and to avoid busbars.
- If you must use an external bus bar then use a fused positive battery bus bar rated >=250 Amps per inverter using Class-T fuses and use a negative battery bus bar or power distribution block rated >=250 Amps per inverter.

**Minimum Recommended Battery to Inverter Ratios**

| Battery | WallMount 280 AH - 200 A BMS | | Server Rack 100 AH - 100 A BMS | |
|---|---|---|---|---|
| | AllWeather | Indoor | LL-S 48V | LifePower4 |
| EG4 Inverter | | | | |
| 12kPV | 1 | 1 | 2.5 | 2.5 |
| 18kPV | 1.5 | 1.5 | 4 | 4 |
| FlexBoss18 | 1.5 | 1.5 | 4 | 4 |
| FlexBoss21 | 1.5 | 1.5 | 4 | 4 |

This chart indicates the minimum number of EG4 batteries required to provide sufficient battery amperage to the inverter to produce it's full rated power. It does not indicate sufficient KWhrs needed for back-up storage for any given set of loads. See EG4 Battery and Inverter Sizer tool on the EG4 website.

IMPORTANT NOTE: 1 WM Battery will limit the output of one FB21 Inverter to 43 Amps hence the minimum ratio is 1.5/1. One battery per FB21 is okay for minimal NEM/TOU or BU systems where the full 50 Amp inverter output is not needed.

**EG4 GridBOSS Breaker Values**

| Breaker Name | Style | Breaker Value(s) |
|---|---|---|
| SmartPort 4 | User Selectable | 30-60 Amps |
| SmartPort 3 | User Selectable | 30-60 Amps |
| SmartPort 2 | User Selectable | 30-80 Amps |
| SmartPort 1 | User Selectable | 30-125 Amps |
| Inverter 3 | User Selectable | 50-90 Amps |
| Inverter 2 | User Selectable | 50-90 Amps |
| Inverter 1 | User Selectable | 50-90 Amps |
| Backed Up Loads | Fixed | 200 Amps |
| Non-BU Loads | No Breaker | Main Breaker |
| GEN | User Selectable | 30-125 Amps |
| GRID | User Supplied | 200 Amps |

**DRAWING #FlexBOSS21-V1-1L-2a,** Version 2.1 ©2026 EG4 ELECTRONICS, LLC. ALL RIGHTS RESERVED.
THIS DIAGRAM IS FOR ILLUSTRATIVE PURPOSES ONLY. EG4™ IS NOT RESPONSIBLE FOR ACCURACY. FINAL WIRING DIAGRAMS SHOULD BE GENERATED BY A LICENSED PROFESSIONAL AND APPROVED BY ALL AUTHORITIES HAVING JURISDICTION INCLUDING MUNICIPAL, COUNTY, STATE OR ANY OTHER GOVERNMENT OR REGULATORY ENTITY WHICH REGULATES THE USE OF THIS EQUIPMENT WHERE IT MAY BE INSTALLED.

## 3. FlexBOSS21 with GridBOSS: Options for Utility Lockable Disconnect(s) and Meter Requirements

**Some Utilities will approve using the Inverter (1,2 & 3) Breakers in the GridBOSS as the Utility PV System Disconnect(s). The GridBOSS door is lockable. In this case you can connect the Inverter's GRID ports directly to the Hybrid Inverter Breakers.**

**<u>Other Utilities require Lockable, Visible Knife-Switch Type Disconnects- if your utility requires this then you have these 3 options below.</u>**

**If your utility requires a dedicated PV Production meter you have two options - either Option #1a or Option #3 below:**

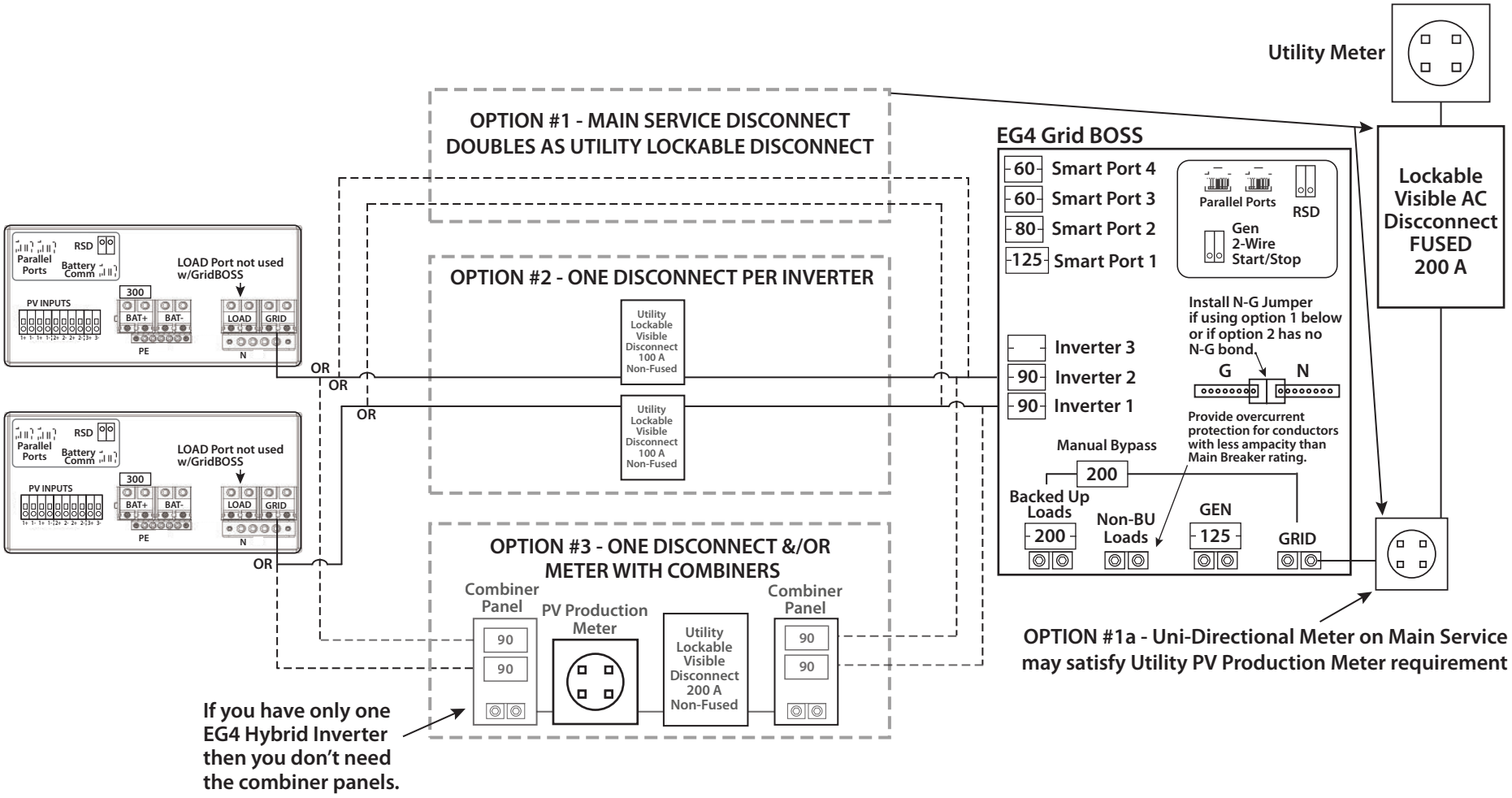


**DRAWING #FlexBOSS21-V1-1L-3,** Version 2.1 ©2026 EG4 ELECTRONICS, LLC. ALL RIGHTS RESERVED.
THIS DIAGRAM IS FOR ILLUSTRATIVE PURPOSES ONLY. EG4™ IS NOT RESPONSIBLE FOR ACCURACY. FINAL WIRING DIAGRAMS SHOULD BE GENERATED BY A LICENSED PROFESSIONAL AND APPROVED BY ALL AUTHORITIES HAVING JURISDICTION INCLUDING MUNICIPAL, COUNTY, STATE OR ANY OTHER GOVERNMENT OR REGULATORY ENTITY WHICH REGULATES THE USE OF THIS EQUIPMENT WHERE IT MAY BE INSTALLED.

# FlexBOSS21 without GridBOSS

## 4. EG4 FlexBOSS21 with Back-Fed Breaker - No Backup - Self Consumption and NEM/TOU only

This system has no backed-up loads. It will simply serve to optimizing NEM/TOU economics by maximizing self-consumption of available solar and battery power of the loads in the Main Breaker Panel by providing battery cycling - applying daytime PV to nighttime loads or optimal TOU times. There will be no backup upon a grid outage in this system as it is wired below. See next page for system with backed-up loads panel. The number of batteries in this system is determined by how many kWhs needs to be cycled on a daily basis.

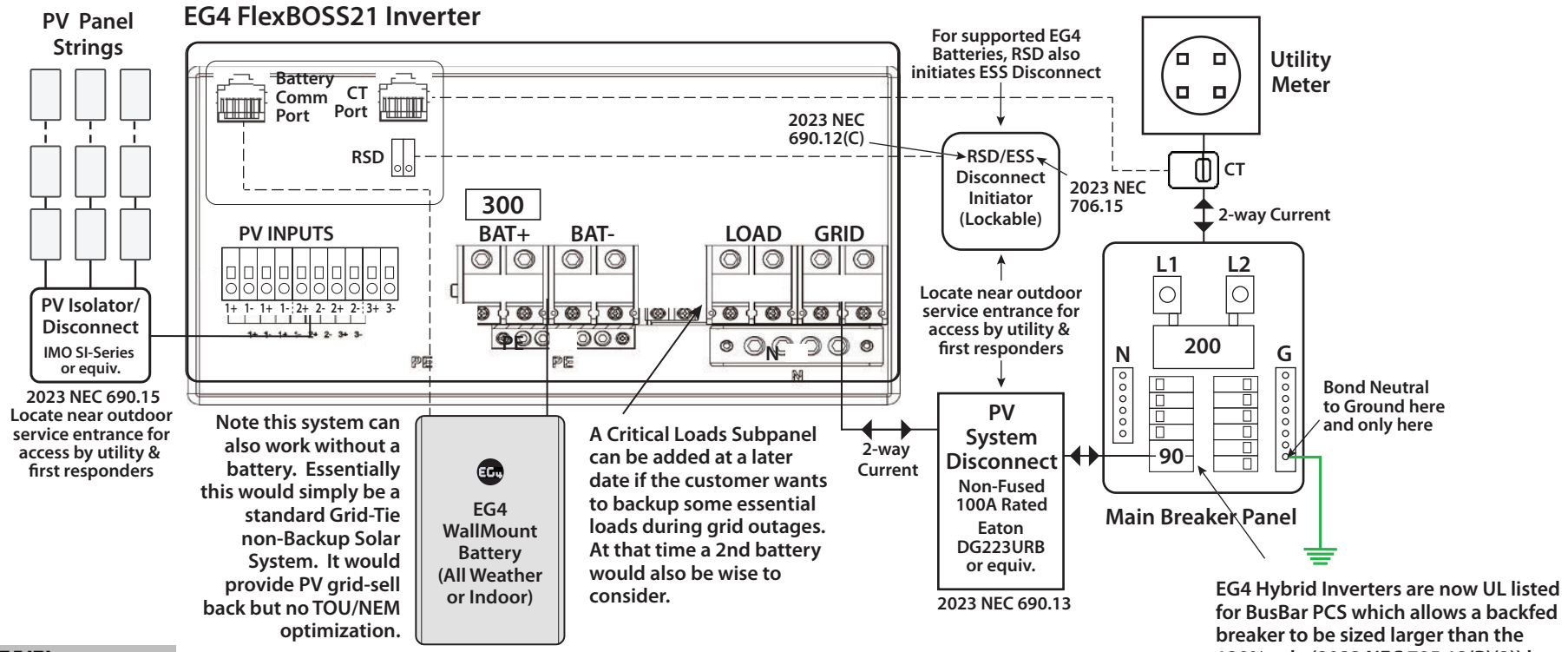


EG4 Hybrid Inverters are now UL listed for BusBar PCS which allows a backfed breaker to be sized larger than the 120% rule (2023 NEC 705.12(B)(2)) by utilizing an Energy Management System (EMS or more commonly known as PCS. See 2023 NEC 705.13). For PCS to work properly the CTs must be located on the utility side of the breaker protecing that busbar as shown above.

| PV INPUT DATA | |
|---|---|
| NUMBER OF MPPTS | 3 |
| INPUTS PER MPPT | 2 (MPPT 1) \| 2 (MPPT 2) \| 1 (MPPT 3) |
| MAX. USABLE INPUT CURRENT | 26A (MPPT 1) \| 26A (MPPT 2) \| 15A (MPPT 3) |
| MAX. SHORT CIRCUIT INPUT CURRENT | 31A (MPPT 1) \| 31A (MPPT 2) \| 19A (MPPT 3) |
| DC INPUT VOLTAGE RANGE | 100 – 600 VDC |
| UNIT START-UP VOLTAGE | 100 VDC |
| MPPT OPERATING VOLTAGE RANGE | 120 – 440 VDC |
| MAX. UTILIZED SOLAR POWER | 21kW |
| MAX. RECOMMENDED SOLAR INPUT | 25kW |

**FlexBOSS21 AC Specs**

| | |
|---|---|
| MAX. OUTPUT CURRENT | 66.7A |
| OUTPUT VOLTAGE | 120/240 VAC; 120/208 VAC (L1/L2/N required) |
| OPERATING VOLTAGE RANGE | 180 – 270 VAC |
| NOMINAL POWER OUTPUT | w/ PV: 16000W @240V \| 13800W @208V<br>w/ out PV: 12000W @240V \| 12000W @208V |
| MAX. AC BYPASS | 90 A |

**DRAWING #FlexBOSS21-V1-1L-4,** Version 2.1 ©2026 EG4 ELECTRONICS, LLC. ALL RIGHTS RESERVED.
THIS DIAGRAM IS FOR ILLUSTRATIVE PURPOSES ONLY. EG4™ IS NOT RESPONSIBLE FOR ACCURACY. FINAL WIRING DIAGRAMS SHOULD BE GENERATED BY A LICENSED PROFESSIONAL AND APPROVED BY ALL AUTHORITIES HAVING JURISDICTION INCLUDING MUNICIPAL, COUNTY, STATE OR ANY OTHER GOVERNMENT OR REGULATORY ENTITY WHICH REGULATES THE USE OF THIS EQUIPMENT WHERE IT MAY BE INSTALLED.

# 5. EG4 FlexBOSS21 with Back-fed Breaker and Partial Home Backup

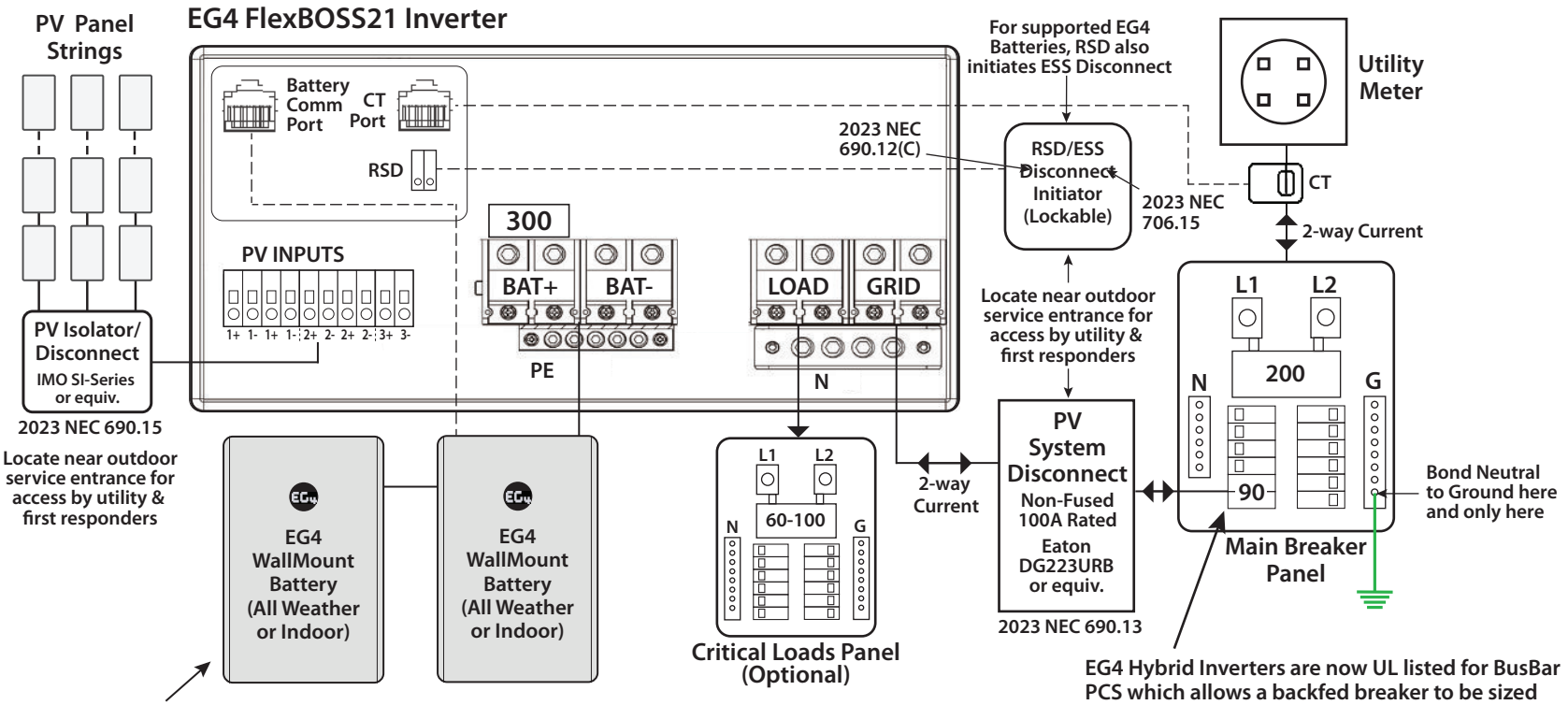


Use EG4 WallMount (WM) or Server Rack (SR) Batteries:

- Up to 6 PowerPro WM (280AH) batteries for 1-3 EG4 Inverters can utilize internal bus bars with no need for external bus bars or fusing.
- Up to12 standard Server Rack batteries in 2 EG4 6-high racks can utilize the rack bus bars with no need for external bus bars or fusing.

For larger battery configurations:

- Utilize "Disable Shared Battery" mode to avoid excessive battery cabling and to avoid paralleling more than 6 WM batteries and to avoid busbars.
- If you must use an external bus bar then use a fused positive battery bus bar rated >=250 Amps per inverter using Class-T fuses and use a negative battery bus bar or power distribution block rated >=250 Amps per inverter.

→ Minimum Recommended Battery to Inverter Ratios

| Battery | WallMount 280 AH - 200 A BMS | | Server Rack 100 AH - 100 A BMS | |
|---|---|---|---|---|
| | AllWeather | Indoor | LL-S 48V | LifePower4 |
| EG4 Inverter | | | | |
| 12kPV | 1 | 1 | 2.5 | 2.5 |
| 18kPV | 1.5 | 1.5 | 4 | 4 |
| FlexBoss18 | 1.5 | 1.5 | 4 | 4 |
| FlexBoss21 | 1.5 | 1.5 | 4 | 4 |

This chart indicates the minimum number of EG4 batteries required to provide sufficient battery amperage to the inverter to produce it's full rated power. It does not indicate sufficient KWhrs needed for back-up storage for any given set of loads. See EG4 Battery and Inverter Sizer tool on the EG4 website.

IMPORTANT NOTE: 1 WM Battery will limit the output of one FB21 Inverter to 43 Amps hence the minimum ratio is 1.5/1. One battery per FB21 is okay for minimal NEM/TOU or BU systems where the full 50 Amp inverter output is not needed.

EG4 Hybrid Inverters are now UL listed for BusBar PCS which allows a backfed breaker to be sized larger than the 120% rule (2023 NEC 705.12(B)(2)) by utilizing an Energy Management System (EMS or more commonly known as PCS. See 2023 NEC 705.13). For PCS to work properly the CTs must be located on the utility side of the breaker protecing that busbar as shown above.

Note that with this system, Solar PV and Battery Power can power loads both in the Critical Loads Subpanel and in the Main Breaker Panel (Self-Consumption) when the grid is on (through grid sell-back through the Backfed Breaker). When the utility goes down only loads in the critical loads subpanel are backed up.

**DRAWING #FlexBOSS21-V1-1L-5,** Version 2.1 ©2026 EG4 ELECTRONICS, LLC. ALL RIGHTS RESERVED.
THIS DIAGRAM IS FOR ILLUSTRATIVE PURPOSES ONLY. EG4™ IS NOT RESPONSIBLE FOR ACCURACY. FINAL WIRING DIAGRAMS SHOULD BE GENERATED BY A LICENSED PROFESSIONAL AND APPROVED BY ALL AUTHORITIES HAVING JURISDICTION INCLUDING MUNICIPAL, COUNTY, STATE OR ANY OTHER GOVERNMENT OR REGULATORY ENTITY WHICH REGULATES THE USE OF THIS EQUIPMENT WHERE IT MAY BE INSTALLED.

# 6. EG4 FlexBOSS21 with Supply Side Tap and Partial Home Backup

**Note that while a Supply Side Tap is a viable option to interconnect a FlexBOSS21 system with the utility we highly recommend you consider using an EG4 GridBOSS. It will be less expensive, will take up less wall space and provide superior features including Load Management which is now required by code for ESS backup systems. See drawings #1 and #2.**

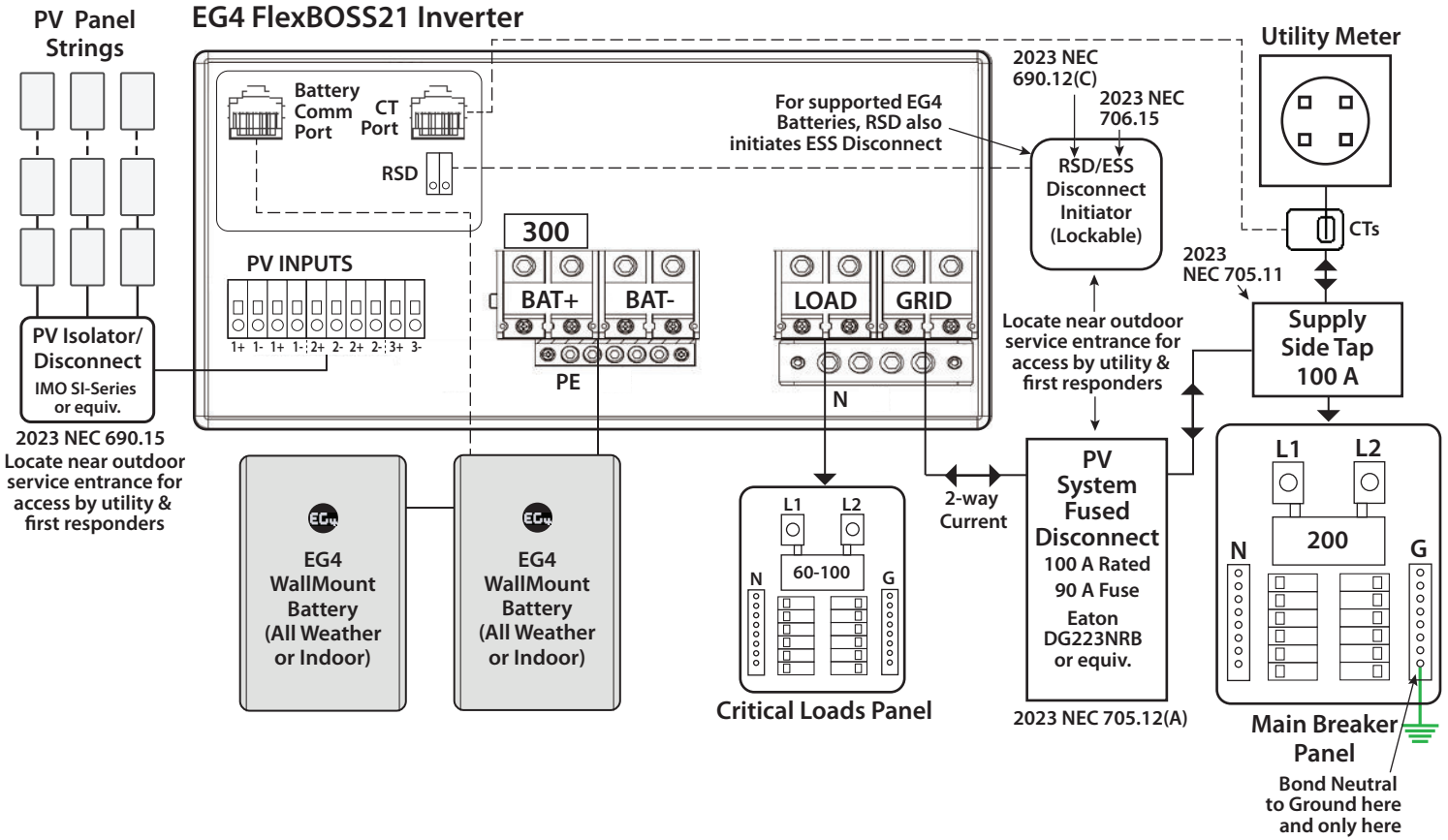


**DRAWING #FlexBOSS21-V1-1L-6,** Version 2.1 ©2026 EG4 ELECTRONICS, LLC. ALL RIGHTS RESERVED.
THIS DIAGRAM IS FOR ILLUSTRATIVE PURPOSES ONLY. EG4™ IS NOT RESPONSIBLE FOR ACCURACY. FINAL WIRING DIAGRAMS SHOULD BE GENERATED BY A LICENSED PROFESSIONAL AND APPROVED BY ALL AUTHORITIES HAVING JURISDICTION INCLUDING MUNICIPAL, COUNTY, STATE OR ANY OTHER GOVERNMENT OR REGULATORY ENTITY WHICH REGULATES THE USE OF THIS EQUIPMENT WHERE IT MAY BE INSTALLED.

# 6a. EG4 FlexBOSS21 with Supply Side Tap and Partial Home Backup (with Notes)

**Note that while a Supply Side Tap is a viable option to interconnect a FlexBOSS21 system with the utility we highly recommend you consider using an EG4 GridBOSS. It will be less expensive, will take up less wall space and provide superior features including Load Management which is now required by code for ESS backup systems. See drawings #1 and #2.**

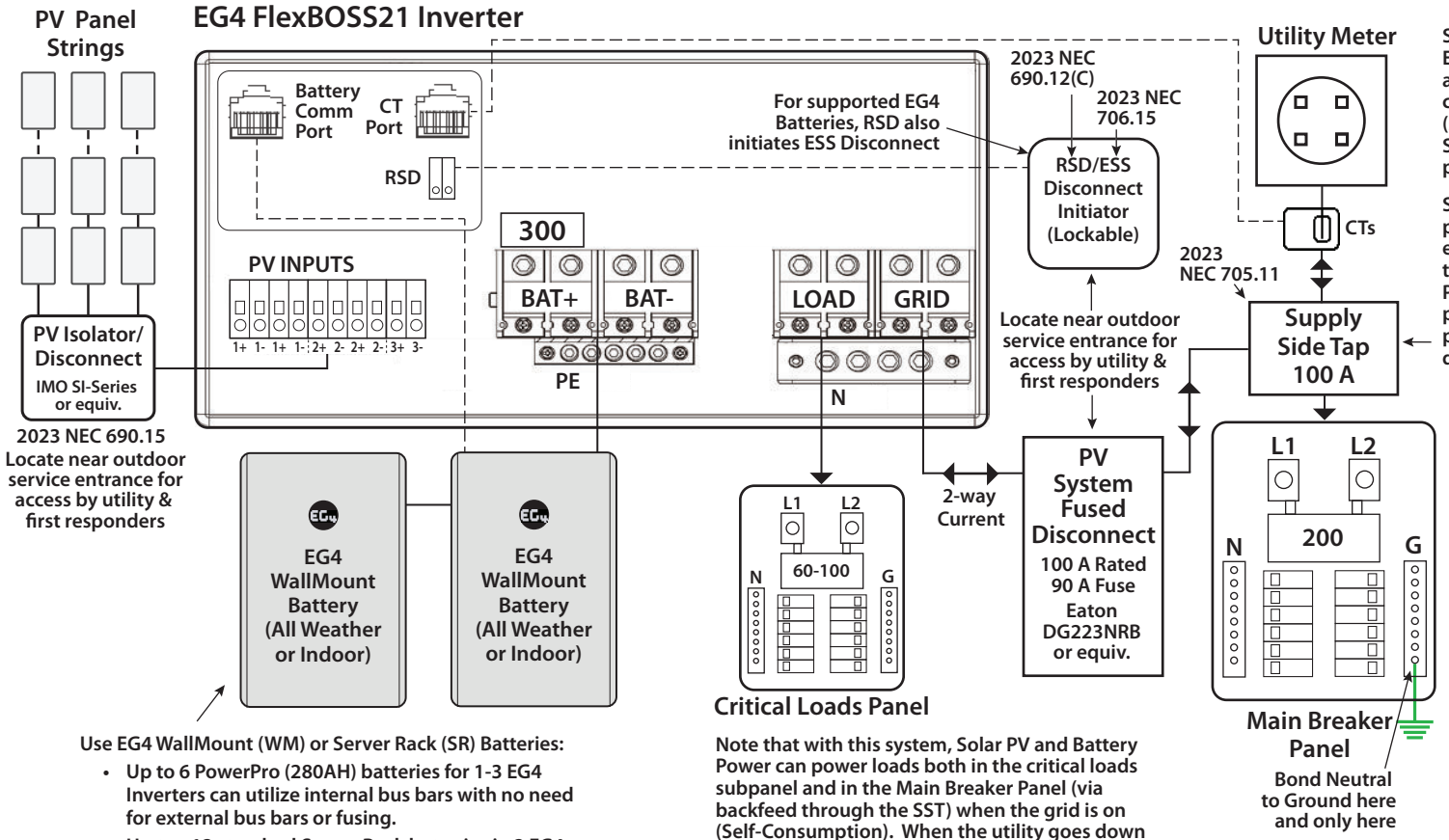


**SUPPLY SIDE TAPS - If your Service Entrance has a 200 A rated Main Panel bus and a 200 A Main Breaker and therefore cannot use a 60 or 70 A Backfed Breaker (see Backfed Breaker diagram) then a Supply-Side Tap may be your solution for point of utility interconnection.**

**Supply Side Taps allow you to feed the full pass-through capability of the inverter to either your critical loads subpanel or to a transfer switch back to the Main Breaker Panel. Since the FlexBOSS21 has a 200 A pass-through rating you can achieve whole panel or whole home backup. (refer to EG4 design tools).**

**Caution:** A Supply Side Tap will essentially add loads to your Service Entrance since the FlexBOSS21 adds 50 A to the total house loads with it's battery charger. With this increased load there is the very real danger of overloading the Service Entrance conductors if the home is already using the full capacity of a 200 A Service. Do this only under advisement of your electrician and/or Electrical Inspector. Alternatively use a Feeder Tap to mitigate this risk. Feeder taps locate this extra load on the load side of the Main Breaker - thus protecting all Service Entrance Conductors. (See Feeder Tap Diagram).

Supply Side Taps should be installed by a professional electrician. Ilsco KUP-L-Taps are recommended, but the installer must adhere strictly to installation instructions with proper torque applied (as measured with a torque wrench). Alternatively, a Polaris or Burnby Insulated MultiTap Connector can be used, but these need to be torqued twice - once upon installation and once 24 hours later. Refer to 2023 NEC Code 705.11 and 705.12.

**Use EG4 WallMount (WM) or Server Rack (SR) Batteries:**

- **Up to 6 PowerPro (280AH) batteries for 1-3 EG4 Inverters can utilize internal bus bars with no need for external bus bars or fusing.**
- **Up too 12 standard Server Rack batteries in 2 EG4 6-high racks can utilize the rack bus bars with no need for external bus bars or fusing.**

**For larger battery configurations:**

- **Utilize "Disable Shared Battery" mode to avoid excessive battery cabling and to avoid paralleling more than 6 batteries.**
- **If you must use an external bus bar then use a fused positive battery bus bar rated >=250 Amps per inverter using Class-T fuses and use a negative battery bus bar or power distribution block rated >=250 Amps per inverter.**

**Note that with this system, Solar PV and Battery Power can power loads both in the critical loads subpanel and in the Main Breaker Panel (via backfeed through the SST) when the grid is on (Self-Consumption). When the utility goes down only loads in the critical loads subpanel are backed up.**

**DRAWING #FlexBOSS21-V1-1L-6a,** Version 2.1 ©2026 EG4 ELECTRONICS, LLC. ALL RIGHTS RESERVED.
THIS DIAGRAM IS FOR ILLUSTRATIVE PURPOSES ONLY. EG4™ IS NOT RESPONSIBLE FOR ACCURACY. FINAL WIRING DIAGRAMS SHOULD BE GENERATED BY A LICENSED PROFESSIONAL AND APPROVED BY ALL AUTHORITIES HAVING JURISDICTION INCLUDING MUNICIPAL, COUNTY, STATE OR ANY OTHER GOVERNMENT OR REGULATORY ENTITY WHICH REGULATES THE USE OF THIS EQUIPMENT WHERE IT MAY BE INSTALLED.

# 7. EG4 FlexBOSS21 with Supply Side Tap and Whole Home Backup

**Note that this drawing is provided for legacy purposes only - if you want to do Whole Home Backup we strongly suggest you replace the Supply Side Tap and the Inverter Bypass Switch in this drawing with an EG4 GridBOSS. It will be less expensive, will take up less wall space and provide superior features including Load Management which is now required by code for ESS backup systems. Multiple inverters are also now very easy to wire and/or add later. See drawings #1 and #2.**

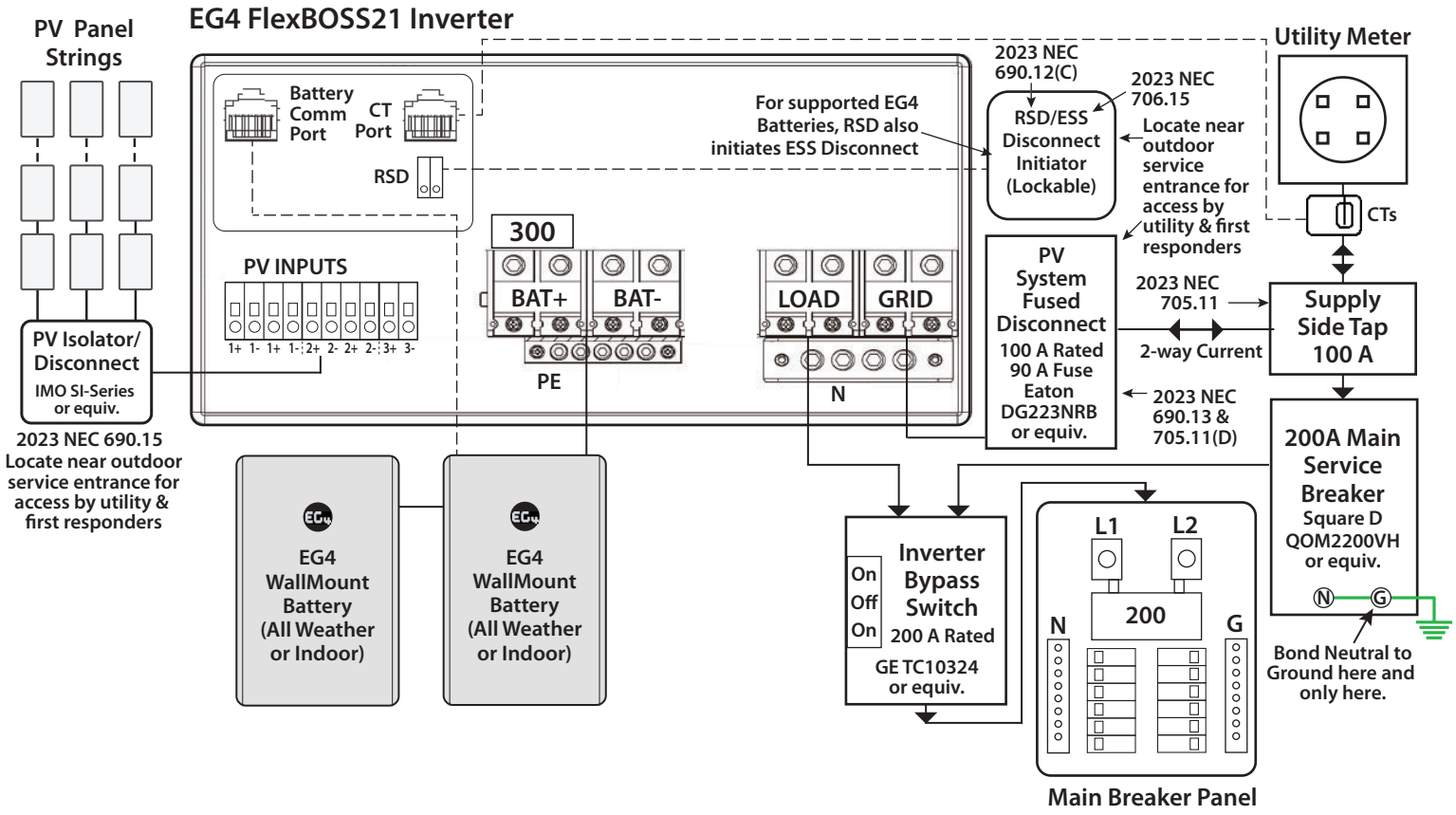


**DRAWING #FlexBOSS21-V1-1L-7,** Version 2.1 ©2026 EG4 ELECTRONICS, LLC. ALL RIGHTS RESERVED.
THIS DIAGRAM IS FOR ILLUSTRATIVE PURPOSES ONLY. EG4™ IS NOT RESPONSIBLE FOR ACCURACY. FINAL WIRING DIAGRAMS SHOULD BE GENERATED BY A LICENSED PROFESSIONAL AND APPROVED BY ALL AUTHORITIES HAVING JURISDICTION INCLUDING MUNICIPAL, COUNTY, STATE OR ANY OTHER GOVERNMENT OR REGULATORY ENTITY WHICH REGULATES THE USE OF THIS EQUIPMENT WHERE IT MAY BE INSTALLED.

# 7a. EG4 FlexBOSS21 with Supply Side Tap and Whole Home Backup (with Notes)

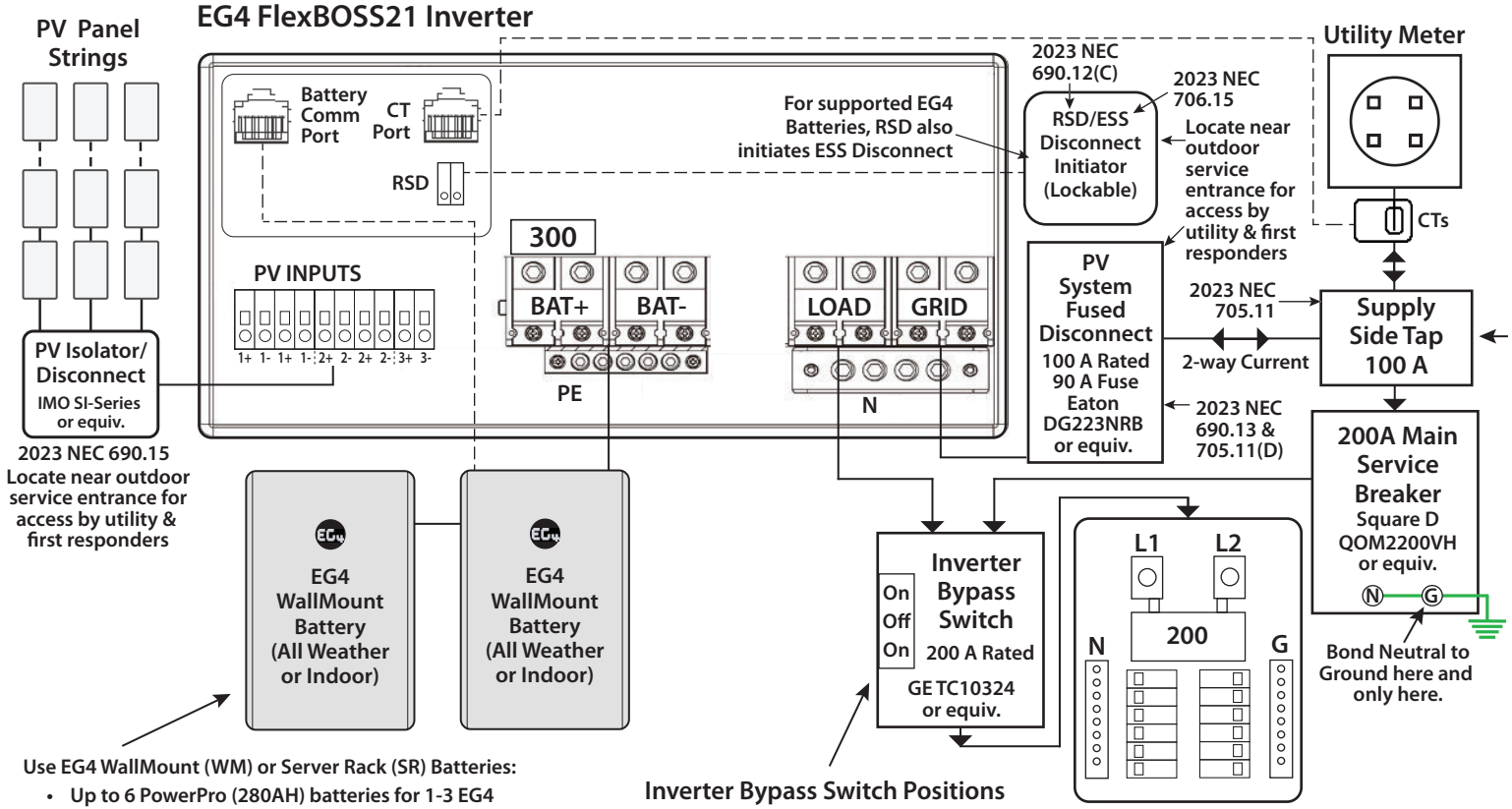


**Use EG4 WallMount (WM) or Server Rack (SR) Batteries:**

- **Up to 6 PowerPro (280AH) batteries for 1-3 EG4 Inverters can utilize internal bus bars with no need for external bus bars or fusing.**
- **Up too 12 standard Server Rack batteries in 2 EG4 6-high racks can utilize the rack bus bars with no need for external bus bars or fusing.**

**For larger battery configurations:**

- **Utilize "Disable Shared Battery" mode to avoid excessive battery cabling and to avoid paralleling more than 6 batteries.**
- **If you must use an external bus bar then use a fused positive battery bus bar rated >=250 Amps per inverter using Class-T fuses and use a negative battery bus bar or power distribution block rated >=250 Amps per inverter.**

**Inverter Bypass Switch Positions**

| | |
|---|---|
| **On** | **When Grid is available, Solar and Battery power the loads with Utility pass-thru as needed. Excess power is sold back to utility if settings allow. When Grid goes down, loads instantly are backed up.** |
| **Off** | **Main Breaker Panel is off. Battery charging from PV and Grid and Utility sell-back are still active.** |
| **On** | **When Grid is available, Solar and Battery power the loads (thru sell-back to SST) with Utility sourced as needed. Excess power is sold back to utility if settings allow. When Grid goes down, Loads are not backed up. User must throw switch to top position to utilize inverter backup power.** |

By providing an Inverter Bypass Switch as shown, Whole Panel or Whole Home Backup can be achieved negating the need for a critical loads subpanel while allowing easy installation and servicing of the inverter. However, to do full Whole Home Backup a 2nd and possibly 3rd inverter may be required. See EG4 Design Guides. A single inverter can energize the whole panel but heavy loads should be shed during grid outages. The down position on the Inverter Bypass Switch is recommended if using only one inverter and no smart loads. Users will then notice grid is down and will need to go into a more frugal use mode before turning on backup.

**Note that this drawing is provided for legacy purposes only - if you want to do Whole Home Backup we strongly suggest you use an EG4 GridBOSS. It will be less expensive, will take up less wall space and provide superior features including Load Management which is now required by code for ESS backup systems. See drawings #1 and #2.**

**SUPPLY SIDE TAPS - If your Service Entrance has a 200 A rated Main Panel bus and a 200 A Main Breaker and therefore cannot use a 60 or 70 A Backfed Breaker (see Backfed Breaker diagram) then a Supply-Side Tap may be your solution for point of utility interconnection.**

**Supply Side Taps allow you to feed the full pass-through capability of the inverter to either your critical loads subpanel or to a transfer switch back to the Main Breaker Panel. Since the FlexBOSS21 has a 200 A pass-through rating you can achieve whole panel or whole home backup. (refer to EG4 Design Guides).**

**Caution:** A Supply Side Tap will essentially add loads to your Service Entrance since the FlexBOSS21 adds 50 A to the total house loads with it's battery charger. With this increased load there is the very real danger of overloading the Service Entrance conductors if the home is already using the full capacity of a 200 A Service. Do this only under advisement of your electrician and/or Electrical Inspector. Alternatively use a Feeder Tap to mitigate this risk. Feeder taps locate this extra load on the load side of the Main Breaker - thus protecting all Service Entrance Conductors. (See Feeder Tap Diagram).

Supply Side Taps should be installed by a professional electrician. Ilsco KUP-L-Taps are recommended, but the installer must adhere strictly to installation instructions with proper torque applied (as measured with a torque wrench). Alternatively, a Polaris or Burnby Insulated MultiTap Connector can be used, but these need to be torqued twice - once upon installation and once 24 hours later. Refer to 2023 NEC Code 705.11 and 705.12.

**DRAWING #FlexBOSS21-V1-1L-7a,** Version 2.1 ©2026 EG4 ELECTRONICS, LLC. ALL RIGHTS RESERVED.
THIS DIAGRAM IS FOR ILLUSTRATIVE PURPOSES ONLY. EG4™ IS NOT RESPONSIBLE FOR ACCURACY. FINAL WIRING DIAGRAMS SHOULD BE GENERATED BY A LICENSED PROFESSIONAL AND APPROVED BY ALL AUTHORITIES HAVING JURISDICTION INCLUDING MUNICIPAL, COUNTY, STATE OR ANY OTHER GOVERNMENT OR REGULATORY ENTITY WHICH REGULATES THE USE OF THIS EQUIPMENT WHERE IT MAY BE INSTALLED.

# 8. EG4 FlexBOSS21 with Feeder Tap and Whole Home Backup

**Note that this drawing is provided for legacy purposes only - if you want to do Whole Home Backup we strongly suggest you replace the Feeder Tap, Feeder Tap Breaker and the Inverter Bypass Switch in this drawing with an EG4 GridBOSS. It will be less expensive, will take up less wall space and provide superior features including Load Management which is now required by code for ESS backup systems. Multiple inverters are also now very easy to wire and/or add later. See drawings #1 and #2.**

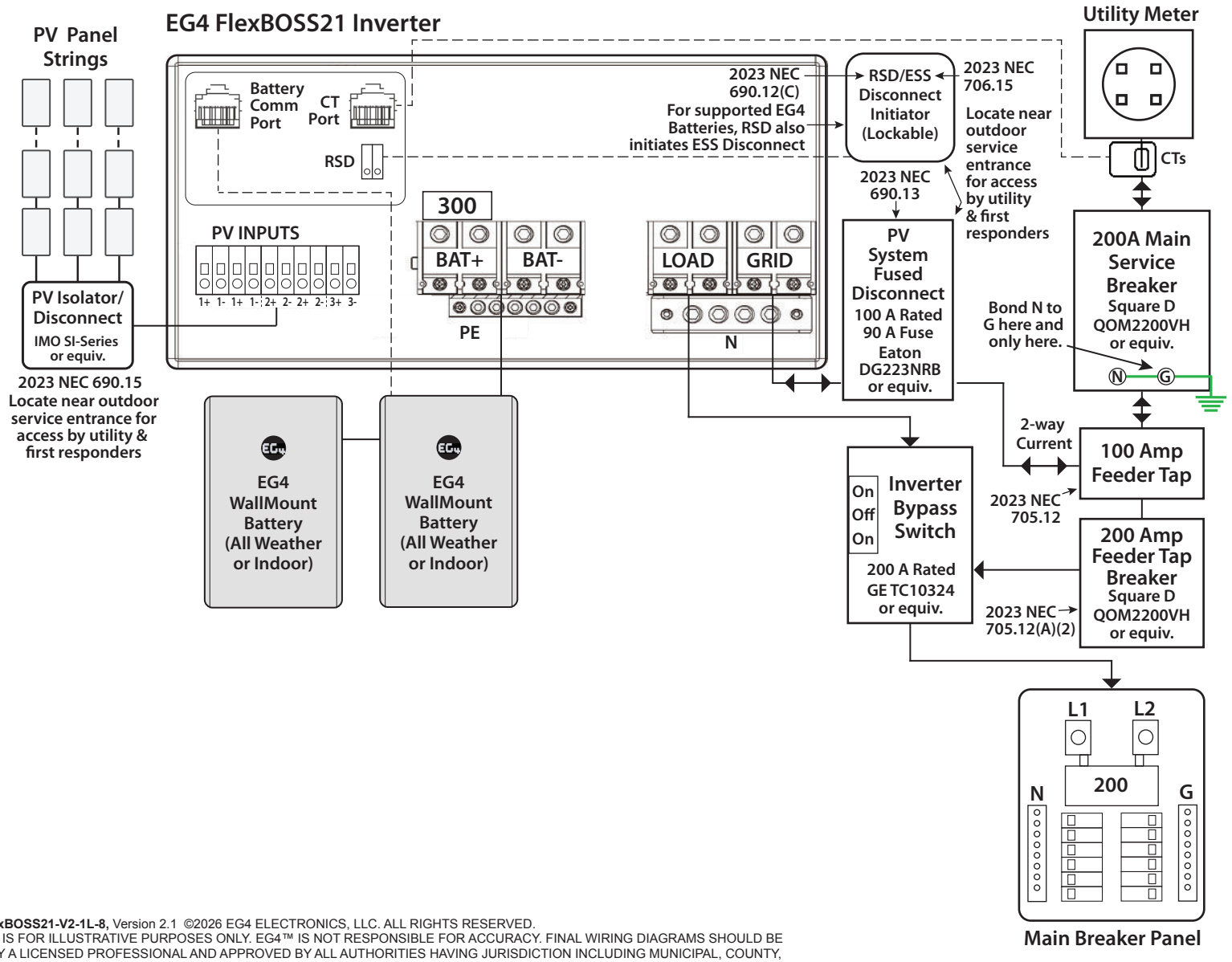


**DRAWING #FlexBOSS21-V2-1L-8,** Version 2.1 ©2026 EG4 ELECTRONICS, LLC. ALL RIGHTS RESERVED.
THIS DIAGRAM IS FOR ILLUSTRATIVE PURPOSES ONLY. EG4™ IS NOT RESPONSIBLE FOR ACCURACY. FINAL WIRING DIAGRAMS SHOULD BE GENERATED BY A LICENSED PROFESSIONAL AND APPROVED BY ALL AUTHORITIES HAVING JURISDICTION INCLUDING MUNICIPAL, COUNTY, STATE OR ANY OTHER GOVERNMENT OR REGULATORY ENTITY WHICH REGULATES THE USE OF THIS EQUIPMENT WHERE IT MAY BE INSTALLED.

# 8a. EG4 FlexBOSS21 with Feeder Tap and Whole Home Backup (with Notes)

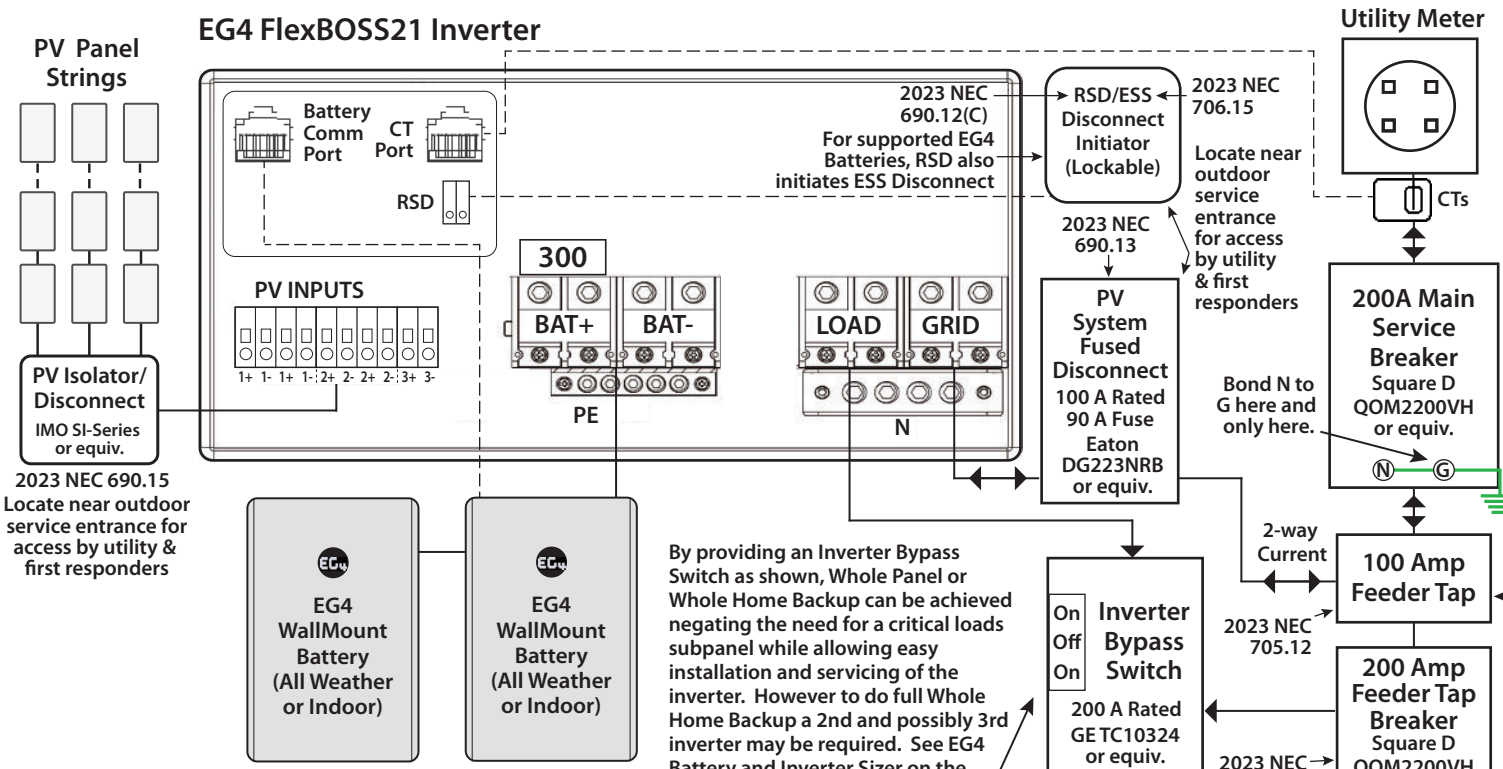


By providing an Inverter Bypass Switch as shown, Whole Panel or Whole Home Backup can be achieved negating the need for a critical loads subpanel while allowing easy installation and servicing of the inverter. However to do full Whole Home Backup a 2nd and possibly 3rd inverter may be required. See EG4 Battery and Inverter Sizer on the website.

Use EG4 WallMount (WM) or Server Rack (SR) Batteries:

- Up to 6 PowerPro (280AH) batteries for 1-3 EG4 Inverters can utilize internal bus bars with no need for external bus bars or fusing.
- Up too 12 standard Server Rack batteries in 2 EG4 6-high racks can utilize the rack bus bars with no need for external bus bars or fusing.

For larger battery configurations:

- Utilize "Disable Shared Battery" mode to avoid excessive battery cabling and to avoid paralleling more than 6 batteries.
- If you must use an external bus bar then use a fused positive battery bus bar rated >=250 Amps per inverter using Class-T fuses and use a negative battery bus bar or power distribution block rated >=250 Amps per inverter.

### Inverter Bypass Switch Positions

| | |
|---|---|
| On | When Grid is available, Solar and Battery power the loads with Utility pass-thru as needed. Excess power is sold back to utility if settings allow. When Grid goes down, loads instantly are backed up. |
| Off | Main Breaker Panel is off. Battery charging from PV and Grid and Utility sell-back are still active. |
| On | When Grid is available, Solar and Battery power the loads (thru sell-back to FT) with Utility sourced as needed. Excess power is sold back to utility if settings allow. When Grid goes down, Loads are not backed up. User must throw switch to top position to utilize inverter backup power. |

**Note that this drawing is provided for legacy purposes only - if you want to do Whole Home Backup we strongly suggest you replace the Feeder Tap, Feeder Tap Breaker and the Inverter Bypass Switch in this drawing with an EG4 GridBOSS. It will be less expensive, will take up less wall space and provide superior features including Load Management which is now required by code for ESS backup systems. See drawings #1 and #2.**

**FEEDER TAPS ARE THE IDEAL AND SAFEST WAY TO TIE YOUR INVERTER TO THE UTILITY GRID while achieving whole home backup, full solar backfeed, and full battery charging capability while fully protecting your home's wiring. However, Feeder Taps must be installed correctly.**

The Main Service Breaker and the Feeder Tap Breaker must be a stand-alone breaker -not a load center. **There can be no loads between the Utility Meter and the Feeder Tap.** If the Main Breaker Panel has a Main 200 Amp Breaker and it is within 10' of the Feeder Tap then some inspectors will allow omitting the 200 Amp Feeder Tap Breaker. However if this is done the conductors between the Feeder Tap and the Main Breaker Panel - as well as the Inverter Bypass Switch are subject to the combined amperage of the Utility (200 Amps) and the backfeed capability of the Inverter (50 Amps) while only being rated to 200 Amps. It's best to include that breaker as shown.

Feeder Taps should be installed by a professional electrician. Ilsco KUP-L-Taps are recommended, but installer must adhere strictly to installation instructions with proper torque applied (as measured with a torque wrench). Alternatively, a Polaris or Burnby Insulated MultiTap Connector can be used, but these need to be torqued twice - once upon installation and once 24 hours later.

**DRAWING #FlexBOSS21-V1-1L-8a,** Version 2.1 ©2026 EG4 ELECTRONICS, LLC. ALL RIGHTS RESERVED.
THIS DIAGRAM IS FOR ILLUSTRATIVE PURPOSES ONLY. EG4™ IS NOT RESPONSIBLE FOR ACCURACY. FINAL WIRING DIAGRAMS SHOULD BE GENERATED BY A LICENSED PROFESSIONAL AND APPROVED BY ALL AUTHORITIES HAVING JURISDICTION INCLUDING MUNICIPAL, COUNTY, STATE OR ANY OTHER GOVERNMENT OR REGULATORY ENTITY WHICH REGULATES THE USE OF THIS EQUIPMENT WHERE IT MAY BE INSTALLED.

# 9. EG4 FlexBOSS21 Off-Grid

**Note: If no utility grid is present or planned then the EG4 6000XP or 12000XP inverters with generator support, AC Coupling support and Smart Load support may be a better choice for Off-Grid use.**

**FlexBOSS21 AC Specs**

| | |
|---|---|
| MAX. OUTPUT CURRENT | 66.7A |
| OUTPUT VOLTAGE | 120/240 VAC; 120/208 VAC (L1/L2/N required) |
| OPERATING VOLTAGE RANGE | 180 – 270 VAC |
| NOMINAL POWER OUTPUT | w/ PV: 16000W @240V \| 13800W @208V<br>w/ out PV: 12000W @240V \| 12000W @208V |
| MAX. AC BYPASS | 90 A |

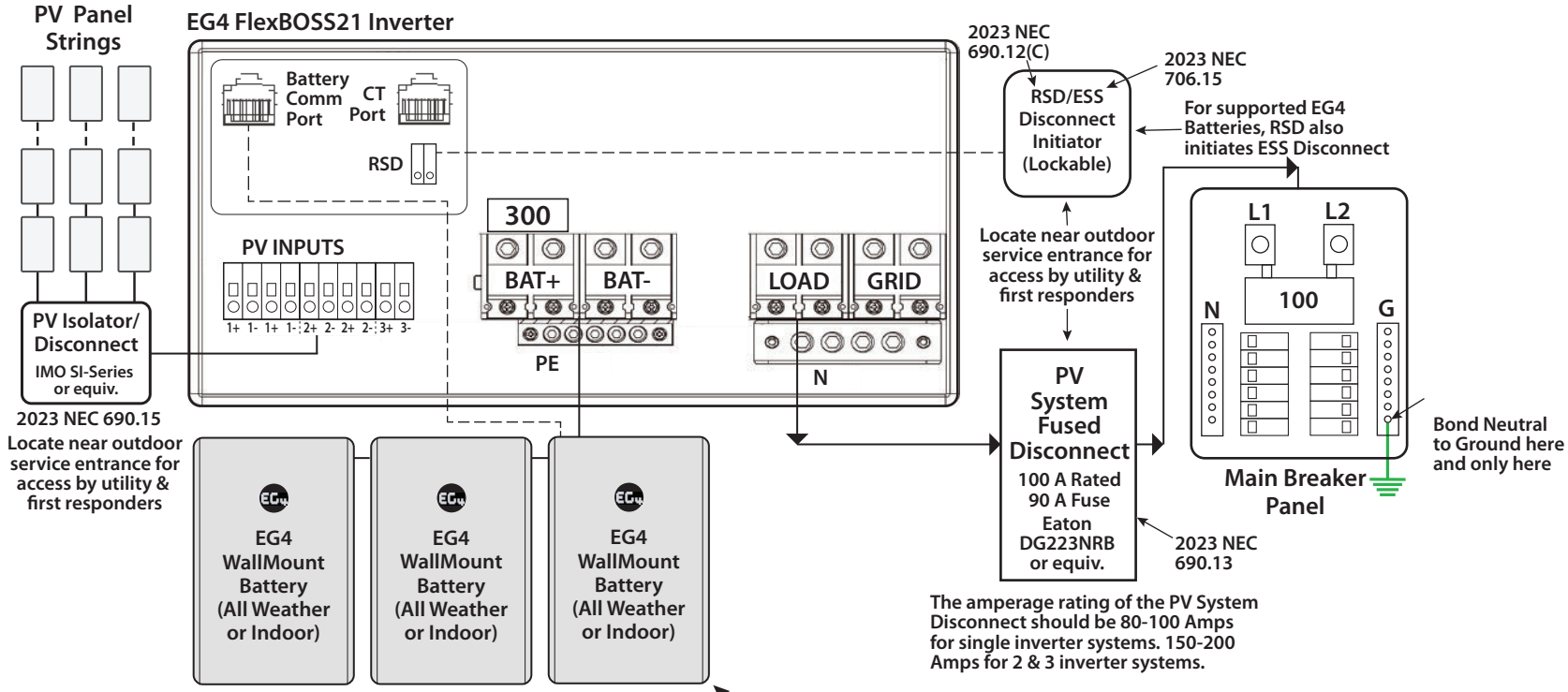


The amperage rating of the PV System Disconnect should be 80-100 Amps for single inverter systems. 150-200 Amps for 2 & 3 inverter systems.

**PV INPUT DATA**

| | |
|---|---|
| NUMBER OF MPPTS | 3 |
| INPUTS PER MPPT | 2 (MPPT 1) \| 2 (MPPT 2) \| 1 (MPPT 3) |
| MAX. USABLE INPUT CURRENT | 26A (MPPT 1) \| 26A (MPPT 2) \| 15A (MPPT 3) |
| MAX. SHORT CIRCUIT INPUT CURRENT | 31A (MPPT 1) \| 31A (MPPT 2) \| 19A (MPPT 3) |
| DC INPUT VOLTAGE RANGE | 100 – 600 VDC |
| UNIT START-UP VOLTAGE | 100 VDC |
| MPPT OPERATING VOLTAGE RANGE | 120 – 440 VDC |
| MAX. UTILIZED SOLAR POWER | 21kW |
| MAX. RECOMMENDED SOLAR INPUT | 25kW |

**Use EG4 WallMount (WM) or Server Rack (SR) Batteries:**

- **Up to 6 PowerPro (280AH) batteries for 1-3 EG4 Inverters can utilize internal bus bars with no need for external bus bars or fusing.**
- **Up too 12 standard Server Rack batteries in 2 EG4 6-high racks can utilize the rack bus bars with no need for external bus bars or fusing.**

**For larger battery configurations:**

- **Utilize "Disable Shared Battery" mode to avoid excessive battery cabling and to avoid paralleling more than 6 batteries.**
- **If you must use an external bus bar then use a fused positive battery bus bar rated >=250 Amps per inverter using Class-T fuses and use a negative battery bus bar or power distribution block rated >=250 Amps per inverter.**

**DRAWING #FlexBOSS21-V1-1L-9,** Version 2.1 ©2026 EG4 ELECTRONICS, LLC. ALL RIGHTS RESERVED.
THIS DIAGRAM IS FOR ILLUSTRATIVE PURPOSES ONLY. EG4™ IS NOT RESPONSIBLE FOR ACCURACY. FINAL WIRING DIAGRAMS SHOULD BE GENERATED BY A LICENSED PROFESSIONAL AND APPROVED BY ALL AUTHORITIES HAVING JURISDICTION INCLUDING MUNICIPAL, COUNTY, STATE OR ANY OTHER GOVERNMENT OR REGULATORY ENTITY WHICH REGULATES THE USE OF THIS EQUIPMENT WHERE IT MAY BE INSTALLED.