Enphase Energy System with IQ Battery 10C Owner's guide



Corporate headquarters contact information

https://enphase.com/support

Warranty

To ensure optimal performance and reliability and to meet warranty requirements, the Enphase Energy System must be installed according to the instructions in the quick install guide.

The Enphase Energy System equipment is intended to operate with an internet connection. Maintaining an internet connection is important not only for updating software and firmware but also for measuring the health of the system. Failure to maintain an internet connection may have an impact on the warranty.

In addition, features like live status monitoring, energy and power monitoring, Storm Guard, and in-app control of appliances that have load control only work when the system has an active internet connection.

Visit https://enphase.com/installers/resources/warranty for full terms and services.

Other information

Product information is subject to change without notice. All trademarks are recognized as the property of their respective owners. User documentation is updated frequently.
Check the Enphase website https://enphase.com/support for the latest information.

Visit https://enphase.com/patents for Enphase patent information.
© 2026 Enphase Energy. All rights reserved. Enphase, the e and CC logos, IQ, and certain other marks listed at https://enphase.com/trademark-usage-guidelines are trademarks of Enphase Energy, Inc. in the U.S. and other countries. Data subject to change.

Audience

This manual is intended for use by owners of Enphase Energy Systems with IQ Battery 10C.

Environmental protection



Waste electrical products (including batteries) should not be disposed of with household waste. Refer to your local codes for disposal requirements.



ELECTRONIC DEVICES: DO NOT THROW AWAY.
Do not install or use the Enphase Energy System equipment if it has been damaged in any way.

Contents

System information 6

Key components 6

Component introduction 7

IQ Battery 10C 7

IQ Combiner 6C 7

IQ Meter Collar 8

System configurations 9

Whole home backup 9

Partial home backup 11

Solar Plus Battery without backup 12

System monitoring and management 13

Enphase web application 13

Setting your smart profile 14

AI Optimization 15

Self-Consumption profile 17

Full Backup profile 19

System care 21

Troubleshooting 22

Safety information 31

Revision history 33

Enphase Energy System with IQ Battery 10C





Fourth-generation Enphase Energy System



System information

Key components



IQ Battery 10C

The IQ Battery 10C is an all-in-one, AC-coupled energy storage system. It is built with safe lithium iron phosphate chemistry and has a compact, modular design. You can add more batteries to scale your system as your energy needs grow.



IQ8 Series Microinverters

Under each solar panel lies an Enphase microinverter that converts DC power generated by the panel into AC power that your home can use. It has superfast response times to changing loads and grid events.



IQ Meter Collar

The Enphase IQ Meter Collar is designed to make whole-home backup accessible for every homeowner. By eliminating the need for a backup subpanel and the associated labor costs of load rewiring, the IQ Meter Collar streamlines installation and ensures seamless integration with Enphase Energy Systems.



IQ Combiner 6C

The IQ Combiner 6C provides the equipment required for the interconnection of a new solar and storage installation. It connects IQ Microinverters, IQ Batteries, and EV chargers, and also comes with built-in load control. With integrated CTs and PLC communication improvements, it reduces installation complexity and saves wiring time.



Enphase App

The Enphase App is a mobile app where you can monitor and control your system status from wherever you are and know exactly how much energy your solar system is producing. You can generate reports on energy production by day, week, month, or year.

Component introduction

IQ Battery 10C

The IQ Battery 10C integrates 240 V and 120 V microinverters, providing backup functionality and removing the need for additional neutral-forming hardware. It provides a total usable energy capacity of 10 kWh and delivers 7.08 kW of continuous power, easily supporting heavy loads such as HVAC units and pool pumps. A modular architecture allows for easy expansion as energy needs evolve.
Its compact design requires less wall space while offering double the capacity of previous models. The system uses safe lithium iron phosphate (LFP) chemistry, which is cobalt-free. The battery is UL 9540A certified for safety and reliability and supports flexible installation with wall bracket and floor pedestal options.





IQ Combiner 6C

- The IQ Combiner 6C consolidates interconnection equipment into a single enclosure, simplifying the installation of IQ Series Microinverters and IQ Batteries by offering a consistent, pre-wired solution for residential applications. The IQ Combiner 6C is compatible with the IQ Battery 10C and IQ Meter Collar, serving as an all-in-one solution that includes breaker spaces for PV, battery, and an EV charger. It integrates a load controller with breaker spaces for loads and includes pre-installed and pre-wired current transformers (CTs) for PV and battery metering.
- The IQ Combiner 6C, together with IQ Series Microinverters, IQ Meter Collar, and IQ Battery 10C provides a complete, backup-enabled Enphase Energy System.

IQ Meter Collar

The Enphase IQ Meter Collar is designed to make whole-home backup accessible for every homeowner. By eliminating the need for a backup subpanel and the associated labor costs of load rewiring, the IQ Meter Collar, which comes with built-in consumption monitoring, streamlines installation and ensures seamless integration with Enphase Energy Systems.

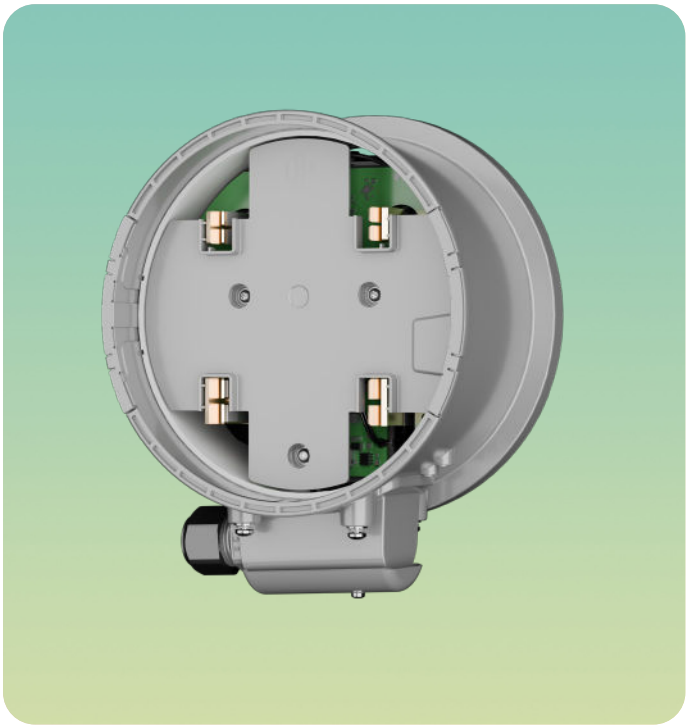

System configurations

Enphase Energy Systems with IQ Battery 10C are typically designed for one of the following configurations:

- **Partial home backup** with three smart profiles: AI Optimization, Self-Consumption profile, and Full Backup profile.
- **Whole home backup** with three smart profiles: AI Optimization, Self-Consumption profile, and Full Backup profile.
- **Solar Plus Battery (no backup)** with one smart profile: Self-Consumption profile.

Whole home backup

Whole home backup offers homeowners a robust set of solar benefits, including utility bill savings, increased energy independence, and enhanced resilience during extended grid outages.

In a whole home backup system, all the home loads are backed up or controlled via load control. The IQ Microinverters power the home with solar energy generated by the panels whenever possible. Excess energy is either exported back to the grid in exchange for utility bill credits or used to charge the batteries. The solar energy stored in the batteries can then be used when the sun is not shining or when the prices of grid power are highest. The system can also export energy to the grid at peak times to maximize utility bill savings. The system's IQ Batteries also provide reliable backup power when the grid goes down, helping homeowners stay prepared for storms, maintenance issues, or other unexpected events. Depending on your power needs and the amount of battery capacity you choose, the system can help sustain off-grid operation for extended periods.

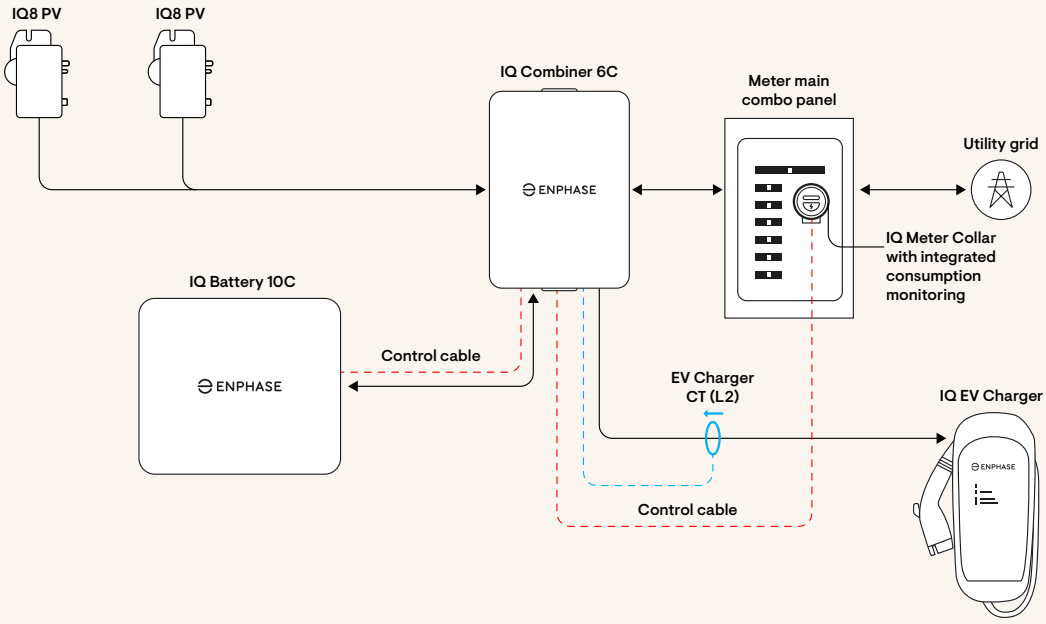

In states with all-in-one panels or meter main combos with utility approval the IQ Meter Collar can be installed underneath the utility meter significantly reducing installation cost and complexity.

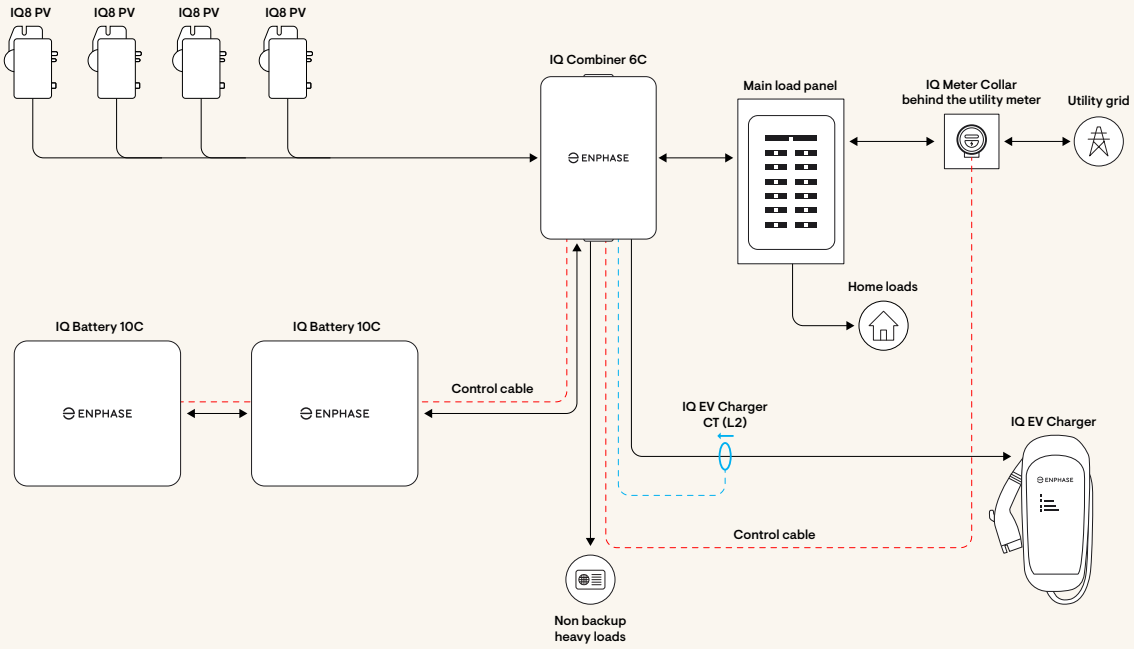

In states with utility approval and standalone meter pans, the IQ Meter Collar can be installed underneath the meter reducing installation cost and complexity.

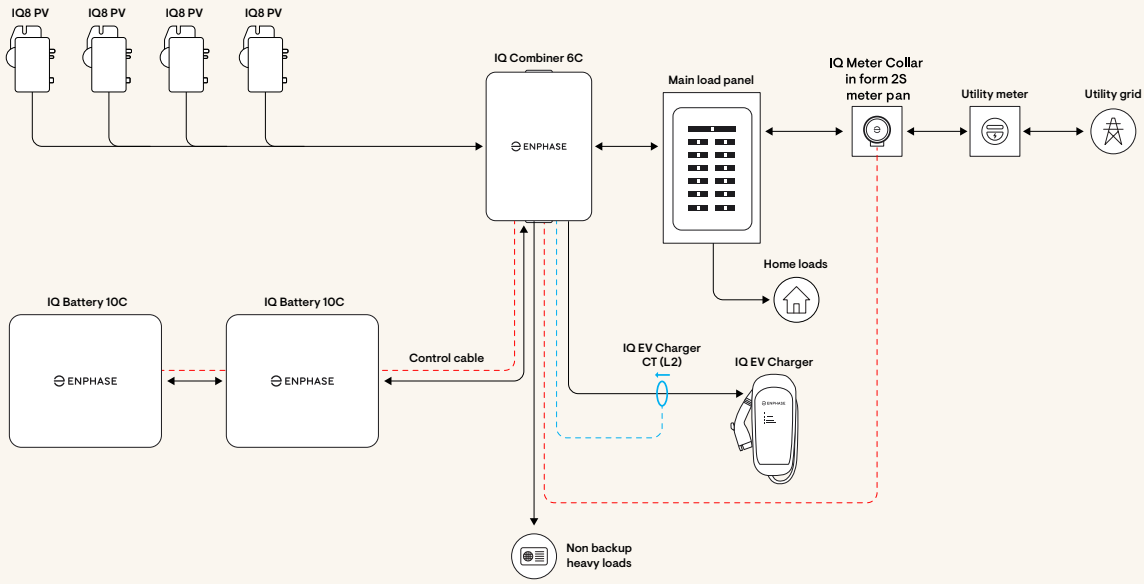

In states without utility approval, the IQ Meter Collar can be installed on standalone meter pan downstream of the utility meter.

Partial home backup

Partial home backup is ideal for homeowners who want to power essential appliances during a grid outage, day or night. If you have this configuration, your Enphase Energy System has been sized to power only the appliances that you and your installer identified as "essential".

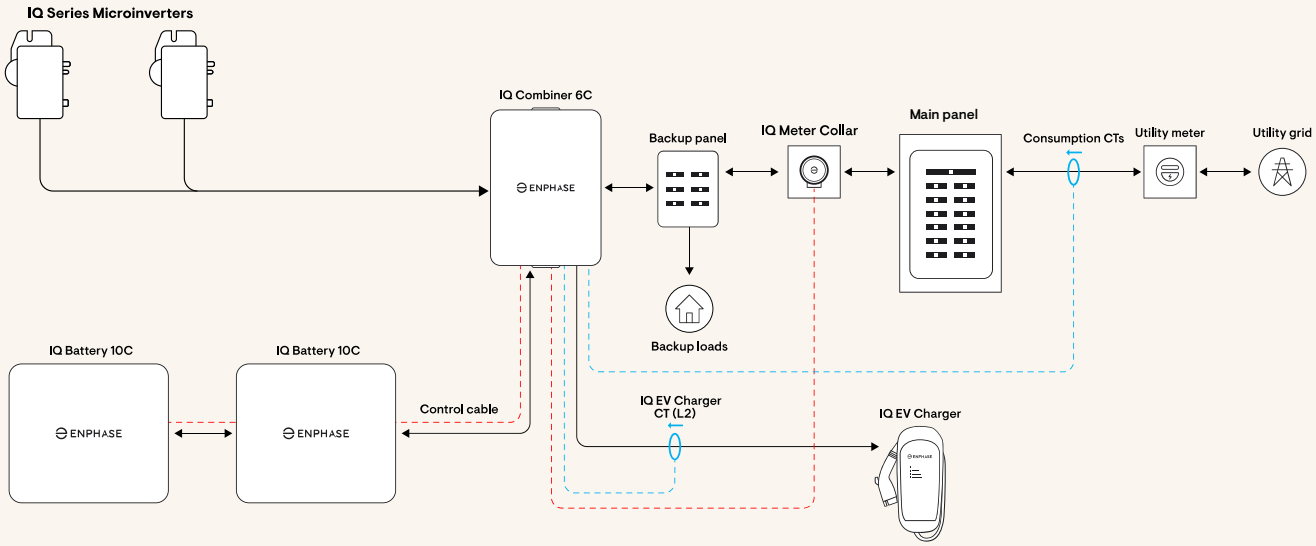

Solar Plus Battery without backup

Pairing IQ Series Microinverters with IQ Batteries, this grid-tied configuration combines solar and storage to help maximize financial benefits with a lower upfront investment. Though this configuration does not offer backup capability, it makes a home more energy-independent and can offer significant long-term savings by minimizing a homeowner's utility bills.

In a Solar Plus Battery system without backup, the microinverters power the home with solar energy generated by the panels whenever possible. Excess solar energy is either exported back to the grid in exchange for utility bill credits or used to charge the batteries. The solar energy stored in the batteries can then be used when the prices of grid power are highest or exported to the grid at peak times for maximum financial benefit.

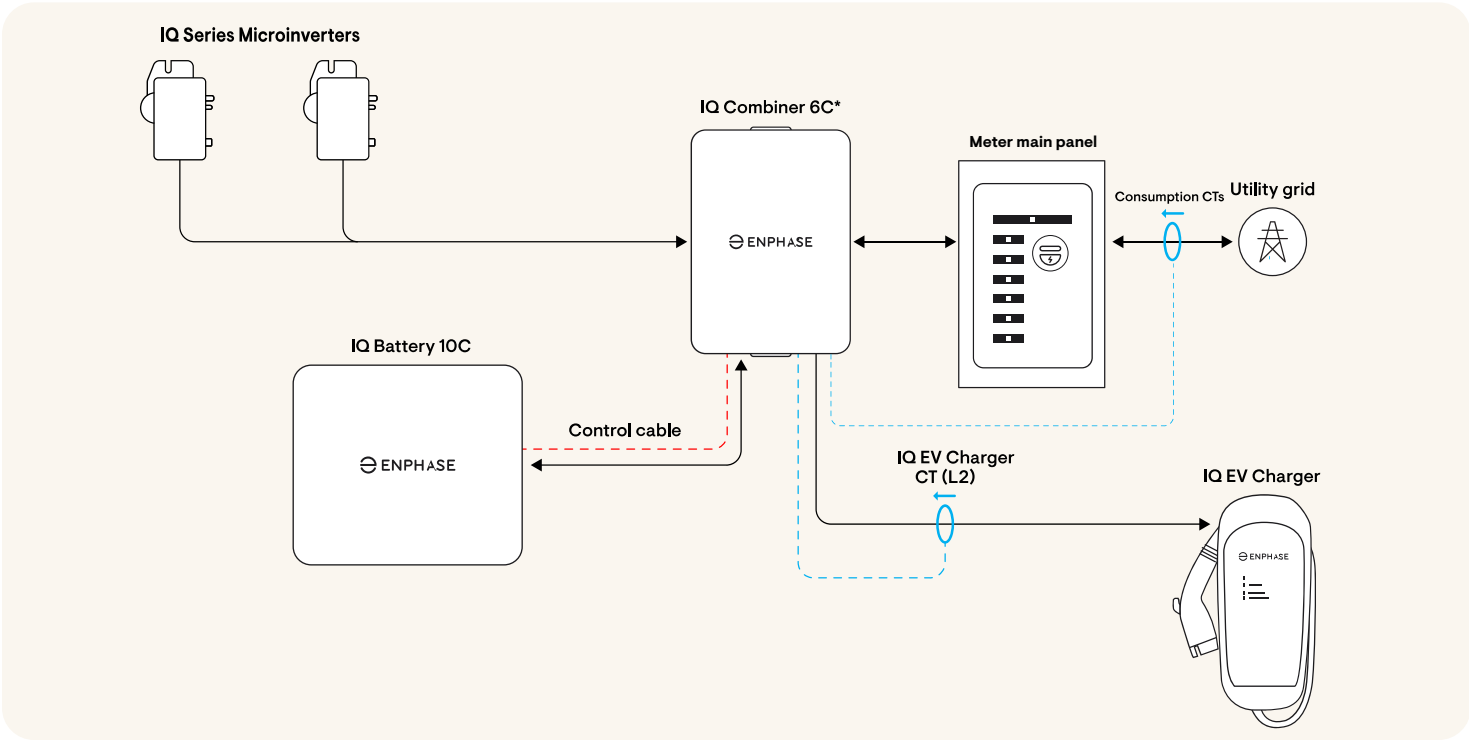

System monitoring and management

Make, use, save, and sell your power right from the palm of your hand with the Enphase App. You can quickly and easily monitor and control your Enphase Energy System and modify system settings directly from the Enphase App.

NOTE: Internet connectivity for your Enphase Energy System is essential to ensure that status updates are available and accurate in the Enphase App.

Getting started

Instructions to activate your Enphase App account are sent to you at the email address you provided to your installer. Look for an email with the subject line "Activate Your Online Solar Monitoring Account." from donotreply@enphaseenergy.com. You will also receive monthly emails from this address. Be sure to unblock this address from your spam or junk mail filters. Read the Enphase App terms of service at https://enphase.com/legal/terms-service.

Enphase App

The mobile application is available for both iOS and Android devices. You can install the latest version of Enphase App from the Apple App Store or Google Play Store.

GET IT ON Google Play

Download on the App Store

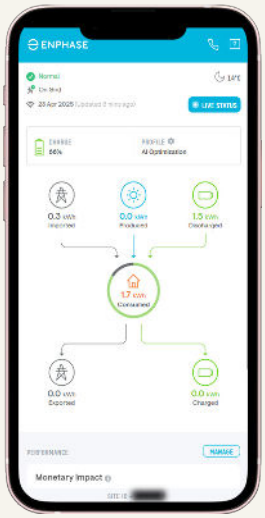

Enphase web application

You can access the Enphase App using your internet browser on your desktop or mobile device. Log into the Enphase App at https://enlighten.enphaseenergy.com

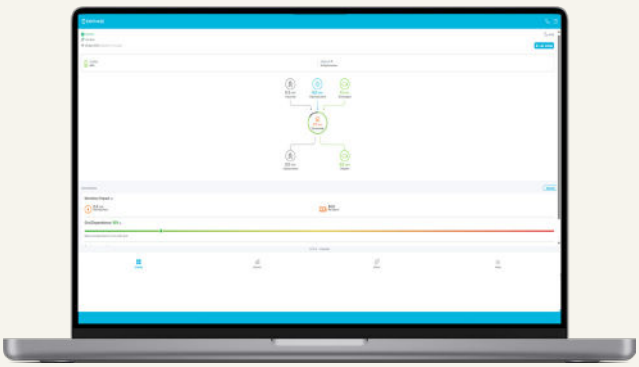

System operation

Setting your smart profile

Your Enphase Energy System has three preconfigured smart profiles that let you choose how your system operates based on your energy management goals. You can easily switch between profiles as your goals change over time.

You can set your Enphase IQ Battery 10C to one of these three smart profiles:

- AI Optimization
- Self-Consumption
- Full Backup

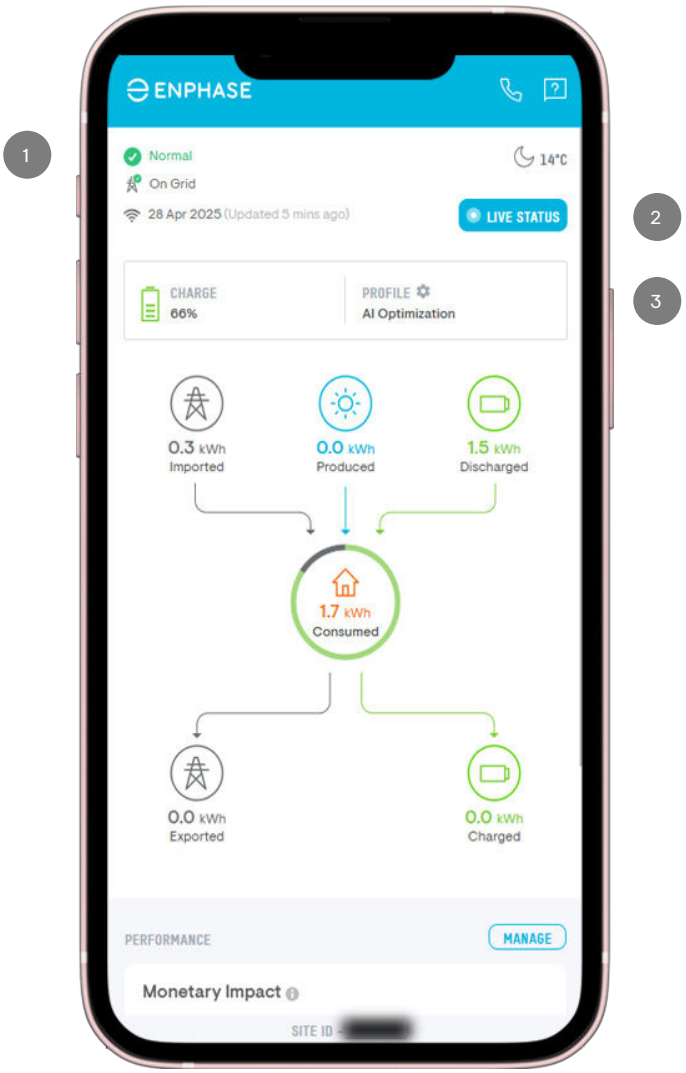

1. In the upper left corner of the Status section, you can see the **operating status** of your system and whether your system is **On Grid** or **Off Grid**.

2. Tap **LIVE STATUS** on the status page to see real-time energy flows for your system.

3. Your system's behavior is determined by the **smart profile** you enable.

AI Optimization*

Under a time-of-use (TOU) rate plan, your utility charges more for electricity during peak demand hours and less during off-peak hours.

To avoid importing expensive electricity from the grid, your system can discharge the energy stored in your batteries during these peak billing hours. In addition, any solar energy you produce during this time will be exported to the grid, maximizing your savings.

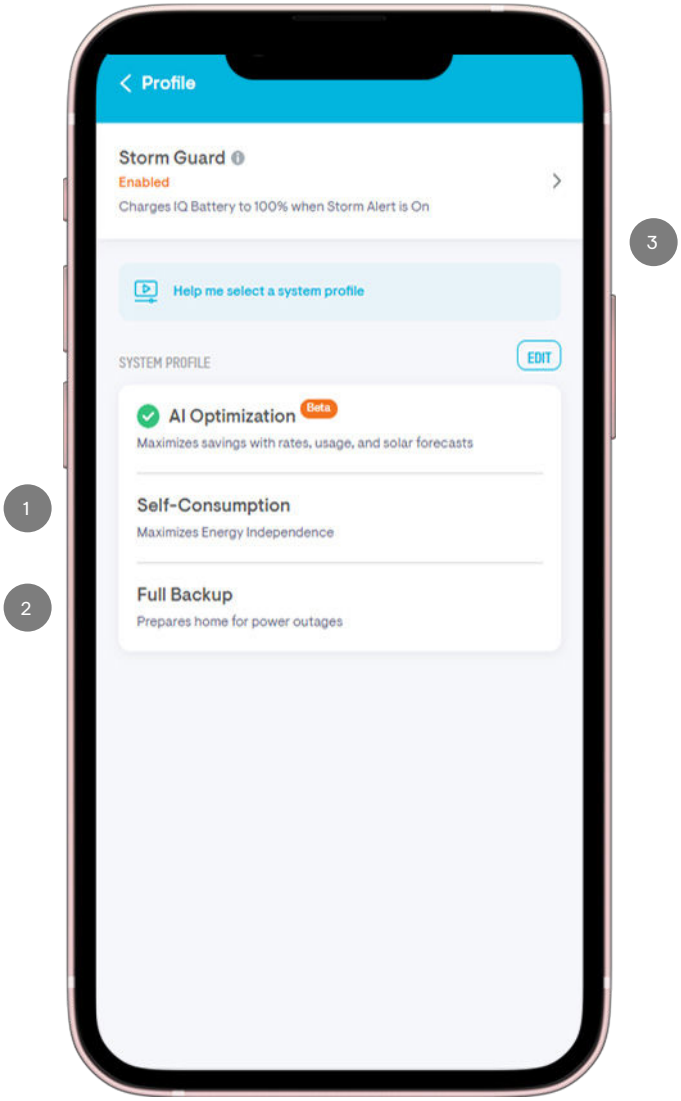

To configure the AI Optimization profile, you will need two key pieces of information:

Your electric utility's rate schedule.

Your desired reserve capacity is the amount of battery power you want to hold in reserve for backup during a grid outage.

1. Select the **AI Optimization** profile to utilize stored energy during peak electricity rate periods.

2. You can edit the **reserve capacity** of your IQ Batteries in the AI Optimization profile. The reserve capacity refers to the percentage of your battery's capacity that you want to reserve for outages. For example, if the reserve capacity is set to 30%, your IQ Batteries will not discharge below 30% unless there is an outage.
You can change your battery reserve capacity setting from the battery storage page on the Enphase App for any of the smart profile settings.

3. The Enphase App comes with the Storm Guard feature that monitors weather conditions in your area. You can toggle on Storm Guard to automatically switch your smart profile to Full Backup profile when severe weather conditions are detected. Storm Guard automatically reverts to Self-Consumption profile when the storm threat passes.

What happens when an outage occurs?

When an outage occurs, your batteries will discharge to power your home.

* The AI Optimization profile is available only to homeowners in California. This profile is planned to roll out to other regions using a time-of-use rate schedule in the future.

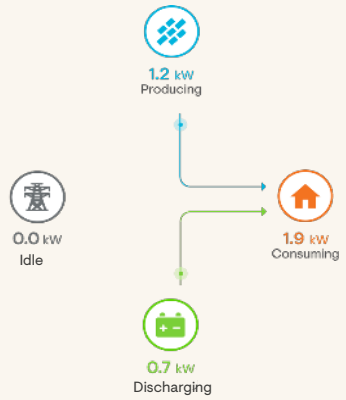

System behaviour during off-peak hours:
Grid power is used to charge the batteries and support home loads.



Battery mode: Export-only

System behavior during peak period when the export rates are high:
Import from the grid is minimized and all the energy is supplied by battery and PV as far as possible.

Operation in AI Optimization

The AI Optimization profile leverages predictive modelling to analyze solar production, home energy consumption, system configuration, electricity rates, and other parameters. This enables the system to maximize financial savings and deliver optimal value to system owners.

During daylight and off-peak hours, your solar production is prioritized to:

1. **Charge your battery**
2. **Power your home**
3. **Export to the grid**

Solar production is used to charge the batteries. If batteries are fully charged, solar production powers the home, and excess generation is exported to the grid.

The Live Status snapshots in the Self-Consumption profile section also applies here.

During peak hours (often after sunset), if the export rates are higher than the import rates, your energy consumption sources are prioritized as follows:

1. **Battery discharge**
2. **Solar (if available and needed to meet the home energy demand)**
3. **Grid import**

Excess solar power is exported to the grid to maximize feed-in credits. In addition, if your battery is in Export Only mode, then excess battery power is exported to the grid.

During peak hours, if export rates are lower than the import rates, your energy consumption sources are prioritized as follows:

1. **Solar (if available)**
2. **Battery discharge**
3. **Grid import**

Click here for more information about the operation of the AI Optimization profile.

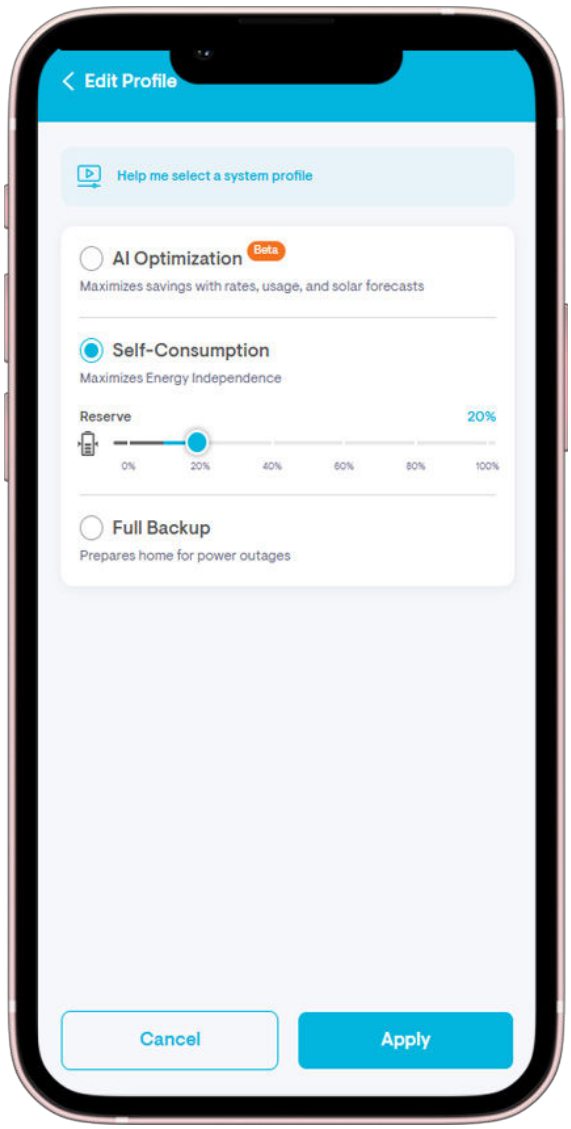

Self-Consumption profile

The Self-Consumption profile always prioritizes using or storing your solar energy over exporting it to the grid. To set it up, you will need to decide how much of your IQ Battery 10C's capacity to hold in reserve for backup during a grid outage. This is your reserve capacity.

In jurisdictions where solar export is not allowed, the produced solar energy is never exported to the grid. Instead, it's used to power your home or charge your batteries during the day, regardless of peak or off-peak hours.

1 Select **Self-Consumption** profile if you wish to use as much as possible of your generated energy at home.

Self-Consumption profile is only available for Enphase Energy Systems paired with Enphase microinverters.



Solar production is powering the home and charging the batteries



Solar production is powering the home, and because the batteries are fully charged, excess generation is exported to the grid.

Operation in Self-Consumption profile

Normal operation in the Self-Consumption profile always prioritizes the consumption or storage of solar production over export to the grid. In jurisdictions where export is not allowed (zero export regulations), energy is never exported to the grid.

During daylight hours, energy is used to power the home or charge the batteries, regardless of peak or off-peak hours.

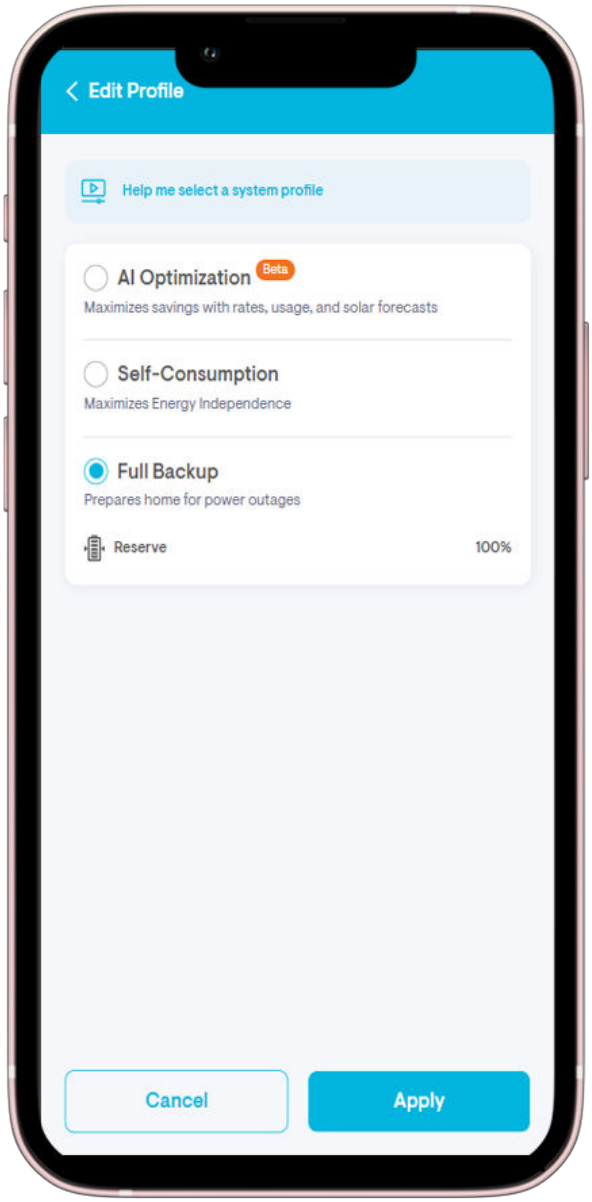

1

Full Backup profile

When you enable the Full Backup profile, all your Enphase Energy System capacity is held in reserve for a power outage. When this profile is set, the batteries do not discharge when the grid is available.

Reserve capacity

NOTE: Reserve capacity is not adjustable in the Full Backup profile. This profile is often used in areas that experience frequent grid outages without a related storm event.

What happens when an outage occurs?

When an outage occurs, your batteries discharge to power your home.

1 Select **Full Backup** profile to store 100% of your battery energy for use during a grid outage at home.

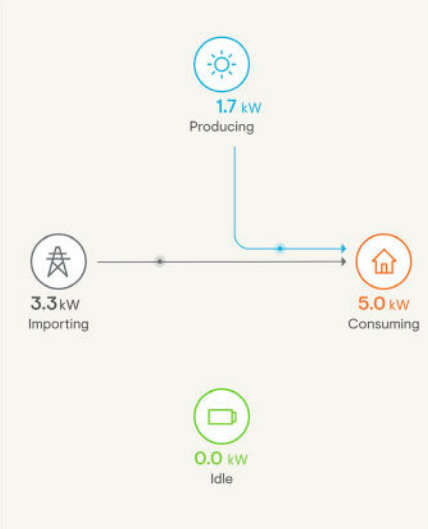

When the battery is fully charged, solar production and grid power the home.

Operation in Full Backup profile

This profile prepares your system for power outages by maintaining a full charge in the battery.

During daylight or off-peak hours, the solar production is prioritised to:

1. Charge your battery
2. Power your home
3. Export to the grid

After the battery is fully charged, electricity is imported from the grid when your home needs more power than the solar panels can provide.

When there is no sunlight, your home uses electricity from the grid.

What happens when an outage occurs?

When an outage occurs, your batteries discharge to power your home.
You can check the backup history of your device through the Enphase App, go to **Menu** > **System** > **Backup History**.



When the grid is down and sunlight is not available, the battery powers the home.

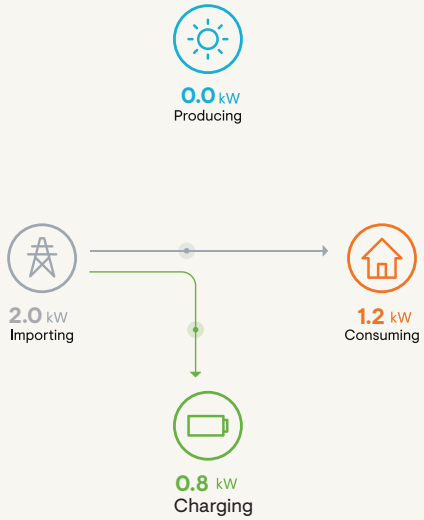

If there is a grid outage at night, the battery will power the backed-up loads until it runs out of charge. Once the grid is back online, the battery will start charging from the grid if the "charge from grid" setting is enabled to restore it to 100% SOC.

System care

The Enphase Energy System equipment is outdoor-rated. However, it should not be immersed in water.

Do not block vents or store flammable, sparking, or explosive objects near the equipment.

Store all objects that could fall onto or collide with the unit away from the equipment.

Never rest anything on top of the equipment.

For a system installed indoors, a nearby smoke detector is recommended. For an outdoor installation, a smoke detector is not necessary.

Use a slightly damp (water only) or dry cloth to clean or dust the equipment as needed. Do not use cleaning solvents or harsh chemicals on the equipment.

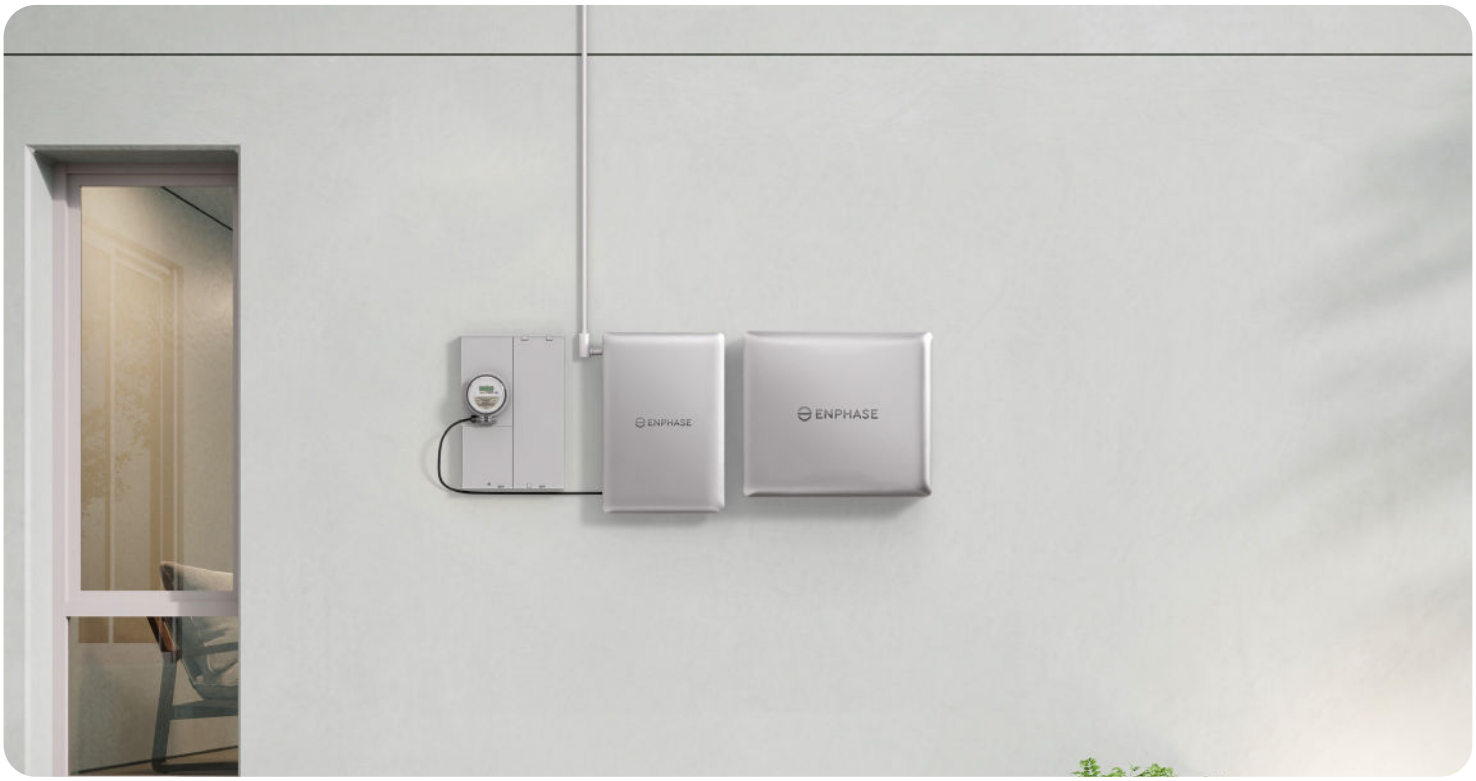

Troubleshooting

Automatic battery charge recovery

Your system includes an automatic state-of-charge recovery feature. When running off-grid and the battery charge is low, the system automatically shuts down the microgrid. It then waits for sunlight, recovers energy from the solar panels (PV), and restores the microgrid without needing an installer or electrician to visit.

When the battery charge is at approximately 10% (5% if using IQ8 PV only), the backup relay in the IQ Combiner 6C opens. This allows the battery to conserve its remaining energy until sunlight is available.

In the morning or during daylight hours, the battery will attempt to restart at increasingly longer intervals: 10, 20, 40, and then 120 minutes. During each restart attempt, the battery forms a microgrid, waits up to 6 minutes or until it loses 0.5% of its SoC before shutting down again.

The battery charges using available sunlight while the backup relay remains open, ensuring that your home loads are disconnected. This allows the battery to charge even with very low PV power since all the available solar energy can be directed to the battery. Once the battery reaches a 30% SoC, the backup relay closes, restoring the microgrid and powering your home's backed-up loads.

Note that during charge recovery, your home appliances will be turned off. This is intentional, as it allows the system to use all available solar energy to recover the charge as quickly as possible.

While this routine is active, the Enphase App may display "Charge Recovery." Once sufficient charge is reached, your backed-up circuits will power up automatically and resume normal operations, so no manual intervention is required.

During extended grid outages or periods with no sunlight, the battery will stop attempting to restart. At 2% SoC or lower, the battery shuts down completely to prevent damage and will wait for grid power or daylight before attempting to restart.

In this situation, if the battery remains at 0% SoC after a full day of good sunlight or once the grid power has returned, you should contact your installer for assistance.

NOTE: Automatic charge recovery works with any PV. With IQ8 PV, the PV starts on its own (Sunlight Jump Start) in the morning, and the battery can recover charge even when its SoC is at 2% or lower.

Battery charging when CFG is disabled

When the “Charge battery from the Grid” setting is disabled in the Enphase App, the battery will not charge from the grid. If solar power production is insufficient, the battery will gradually discharge and, upon reaching its shutdown level, will stop powering the home. At that point, it will draw a minimal amount of power from the grid, not to recharge the battery, but to maintain its state of charge. This protective measure ensures battery health, keeps internal electronics operational, and prevents the battery from dropping to a level that could compromise its long-term performance or safety.

System recovery after shutdown

Your system has shut down if it's no longer providing power to your home. A shutdown can be caused by the batteries becoming fully discharged during an outage, an electrical overload, a communication failure, or another equipment issue. The recovery steps will vary depending on the cause of the shutdown.

Shutdown due to battery depletion

If the Enphase App shows your battery is at a 10% state of charge or lower, it has shut down and will restart automatically during the day to recharge from solar power. The system will automatically recharge your batteries during an outage whenever solar production exceeds your home's consumption.

If solar production is available but the batteries do not recover, follow the instructions on page 29 to restart them by cycling the control switches on IQ Battery 10C.

Shutdown due to a large electrical load

If the Enphase App shows your IQ Battery's state of charge is greater than 10%, a large electrical load (or multiple loads running at once) may have caused your microgrid to shut down. This is the most likely reason if the shutdown occurred right after you started a large appliance or motor.

Appliances like air conditioners and electric dryers are common examples because they need a significant amount of power to start.

If you suspect that a specific load or a combination of loads is overloading the batteries, you should immediately shut OFF the load(s) and allow the batteries to restart automatically.
Watch the video talking about best practice https://youtu.be/4WMhtPMSaZc.

Managing loads to prevent system shutdowns

Well pumps, sump pumps, pressure pumps, and AC electric motors can be some of the most challenging loads for your system to run due to their large start-up power requirements.

Pumps can be especially challenging because they often turn on when other large appliances are already running. For example, it's common to run a large electric oven while also using a lot of water in the kitchen. Your
Enphase Energy System may be sized to run the oven on its own, and it may be able to start the pump, but it may not be able to do both at the same time.

One solution is to turn off the oven just long enough to allow the pump to start. Once the pump is running, you can turn the oven back on.
As your energy needs change over time—for example, when you add new appliances or new family members—you may want to ensure your system is still properly sized to handle your energy demands.

Shutdown due to communications system failure

This is a very unusual failure scenario because the Enphase Energy System does not shut down on communication loss between components.

If your Enphase App shows communications failure between system components, such as IQ Batteries and the IQ Gateway, give the system up to 15 to 20 minutes to recover on its own. The Enphase Energy System reconnects automatically and recovers from communications failures. If more than 20 minutes have elapsed and you do not see communication established, contact Enphase Support. In the event of a power outage, you can also follow the instructions on Access the IQ Battery 10C DC switch to toggle the DC switch on an IQ Battery 10C to force a restart.

The Network communications LED (LED 1) on the IQ Gateway should be solid green when connected to the internet. If the Enphase App shows the IQ Gateway is not reporting and the Network communications LED is red, reconnect the IQ Gateway to the internet using Wi-Fi, Ethernet, or a cellular network. Make sure the IQ Gateway is on.

Check if the IQ Gateway is turned ON. If not, switch it ON. For more information on IQ Gateway LEDs and buttons, see Gateway LEDs, buttons, and breakers inside the IQ Combiner 6C.

Gateway LEDs, buttons, and breakers inside the IQ Combiner 6C

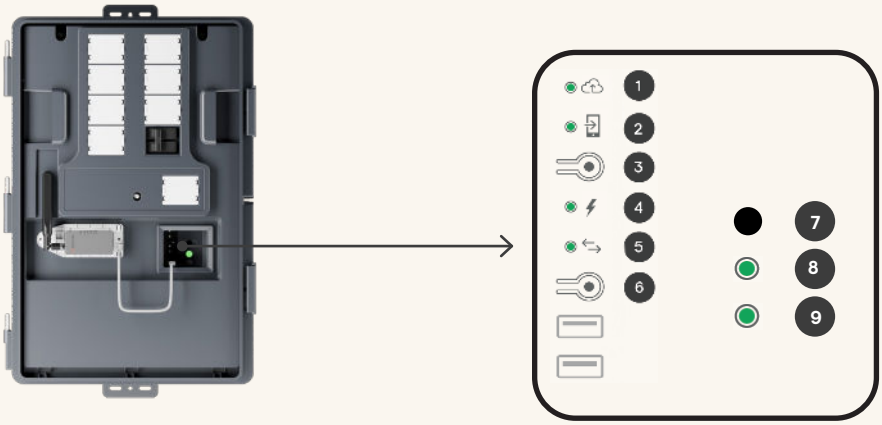

1 ENPHASE INSTALLER PLATFORM (EIP) COMMUNICATION LED

LED COLOUR	LED STATUS	EVENT
	Green	IQ Gateway is connected to the Enphase Installer Platform
	Flashing green	Connecting to the Enphase Installer Platform or the Wi-Fi router
	Red	Connected to the local network only, i.e., without internet
	Off	No network is available

2 AP MODE LED

LED COLOUR	LED STATUS	EVENT
	Green	AP mode is enabled, and the IQ Gateway Wi-Fi network is available
	Off	AP mode is disabled Default state unless the installer uses AP mode

3 AP MODE BUTTON

EVENT
To be used only by the installer to configure the system
Starts IQ Gateway's wireless Access Point (AP) to connect a mobile phone directly

4 POWER PRODUCTION LED

LED COLOUR	LED STATUS	EVENT
	Flashing green	An upgrade of microinverters is in progress
	Green	All microinverters are producing power
	Red	One or more microinverters have stopped producing power
	Flashing red	Microinverters are not yet detected
	Off	All microinverters have stopped producing power
Usually red at dawn/dusk, off at night, and flashing red after IQ Gateway restarts		

5 DEVICE COMMUNICATION LED

LED COLOUR	LED STATUS	EVENT
	Flashing green	IQ Gateway is scanning for microinverters
	Green	All microinverters are communicating with the IQ Gateway
	Red	One or more microinverters have stopped communicating
	Off	All microinverters have stopped communicating
Usually red at dawn and dusk, off at night		

6 DEVICE SCAN BUTTON

EVENT
To be used only by the installer to configure the system
Press to start/stop a 15-minute scan for devices over the power line

7 RESET BUTTON

EVENT	DESCRIPTION
Short press	Resets the IQ Gateway
Long press	Resets the Combiner Controller Board (CCB)

8 COMBINER STATUS (CS) LED

LED COLOUR	LED STATUS	EVENT
	Green	No signaling error between components
	Off	Grid and DER power are not available
	Flashing red	Control signaling error between components
	Flashing blue	Internal signaling error between components

9 SHUTDOWN STATUS (SS) LED

LED COLOUR	LED STATUS	EVENT
	Flashing green	System Shutdown not initiated, DER relay opened
	Green	System Shutdown not initiated, DER relay closed
	Off	System Shutdown initiated, DER and load relays opened
	Red	System Shutdown self-test fails
	Flashing red	System Shutdown mechanism error
	Rapid flashing red	System Shutdown not initiated, DER or load relay is stuck open/closed
The Shutdown Status (SS) LED may act as the rapid shutdown and emergency shutdown indicator, depending on the system configurations installed.		

NOTE: On power-up, LEDs an take up to 30 seconds to glow.

NOTE: After powering off the gateway, wait for 2 minutes before powering it back on.

Breakers in IQ Combiner 6C

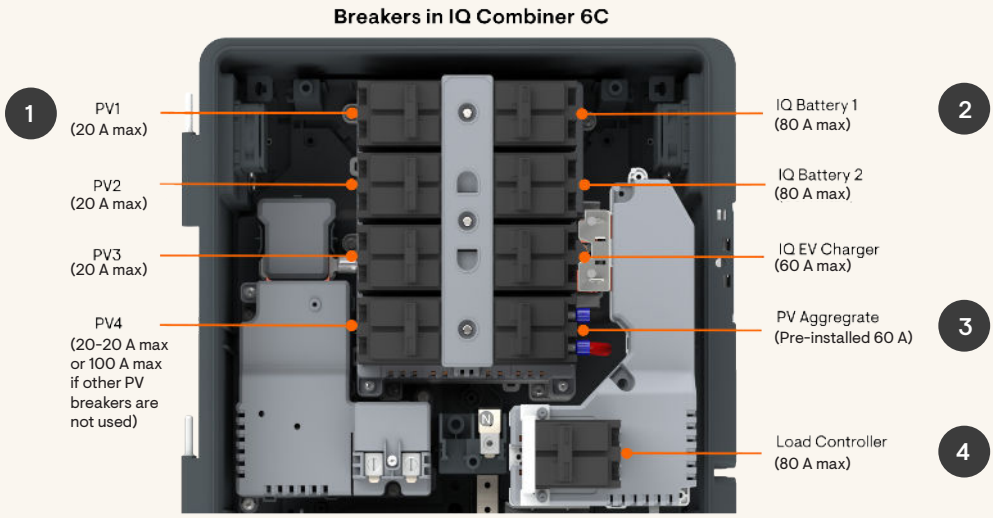

1

The PV breakers support up to 5 branch circuits, allowing for the safe and controlled distribution of solar-generated power.

2

The battery breakers ensure proper energy flow between storage and household loads.

3

The aggregate PV breaker, which comes pre-installed in the enclosure, can act as a rapid shutdown device.

4

The load controller is integrated into the IQ Combiner 6C, which helps you manage power distribution efficiently.

IQ Gateway communications troubleshooting

If the IQ Gateway has stopped reporting to the Enphase App, see Reconnecting your Envoy S or IQ Gateway.

If the IQ Gateway loses power or fails, your IQ Batteries will not discharge while the system is connected to the grid. However, if the system is off-grid, the batteries may shut down after a prolonged loss of communication with the IQ Gateway. If your IQ Gateway fails, contact your installer to submit a warranty claim for a replacement (if applicable).

Does the Enphase App show that the IQ Gateway is not reporting, and is the top-most LED (Network communications LED) on the IQ Gateway lit red?

The Network communications LED (top-most LED) in the IQ Gateway in the IQ Combiner 6C is lit solid green when connected to the Enphase App.

If the Network communications LED is not solid green, then you may need to reconnect the IQ Gateway to the Enphase App using Wi-Fi, hard-wired Ethernet, or a cellular network.

For more information on IQ Gateway LEDs and buttons, see Gateway LEDs, buttons, and breakers inside the IQ Combiner 6C.

To learn how to monitor your system without an internet connection, see Monitoring your Enphase system without internet connectivity.

IQ Meter Collar

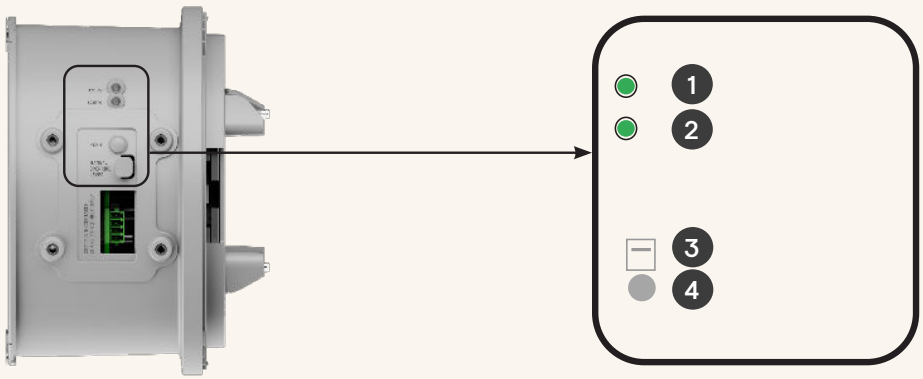

1 NORMAL OPERATION

	LED	LED COLOUR	LED STATUS	EVENT
1	Relay Control		Red Red	Your system is connected to the utility grid, and your home is being powered by the utility grid.
2	Relay Control		Off Red	Your system is running independently from the grid, and your home is being powered using solar or battery power.
3	Relay Control		Off Slow flashing red	Your system is running in grid-agnostic mode, following a user command given through the Enphase App. Your home is being powered using solar or battery power.

2 ERROR STATES

	LED	LED COLOUR	LED STATUS	EVENT
1	Relay Control		Red Flashing red	The system is stuck in on-grid mode and can't switch to off-grid mode. Press and hold the push button for 7–10 seconds to reset.
2	Relay Control		Off Red	This is an error state caused due to communication loss, overheating, or an MID fault. Press the push button for 15 seconds to reset. If the error persists, contact Enphase Support.
3	Relay Control		Off Flashing red	The system is stuck in off-grid mode and can't switch to on-grid mode. Press and hold the push button for 7–10 seconds to reset.
4	Relay Control		Off Rapid flashing red	This is an error state caused due to communication loss, overheating, or an MID fault. Press the push button for 15 seconds to reset. If the error persists, contact Enphase Support.
5	Relay Control		Off Off	The device is not powered. It may be unplugged or not receiving power. Check connections and contact support if the problem persists.

Resetting the IQ Battery 10C DC switch

In the unlikely event that a battery doesn't automatically recover from an overload or failure, you may need to manually reset it using the battery's DC switch.

Turning off the IQ Battery 10C

1. Locate the two control switches on the IQ Battery.
2. Press and hold down each switch for five seconds.
3. Wait for up to 30 seconds while the LED blinks red.
4. Once the LEDs on all batteries have turned off, turn off the IQ Battery breaker(s) in the IQ Combiner 6C.

Turning on the IQ Battery 10C

1. Turn on the IQ Battery breaker(s) in the IQ Combiner 6C.
2. Press and hold down each control switch for five seconds.
3. The LED will briefly light up green, followed by red when the battery is booting up.
4. Wait for the LED to turn solid blue or green to indicate normal operation.

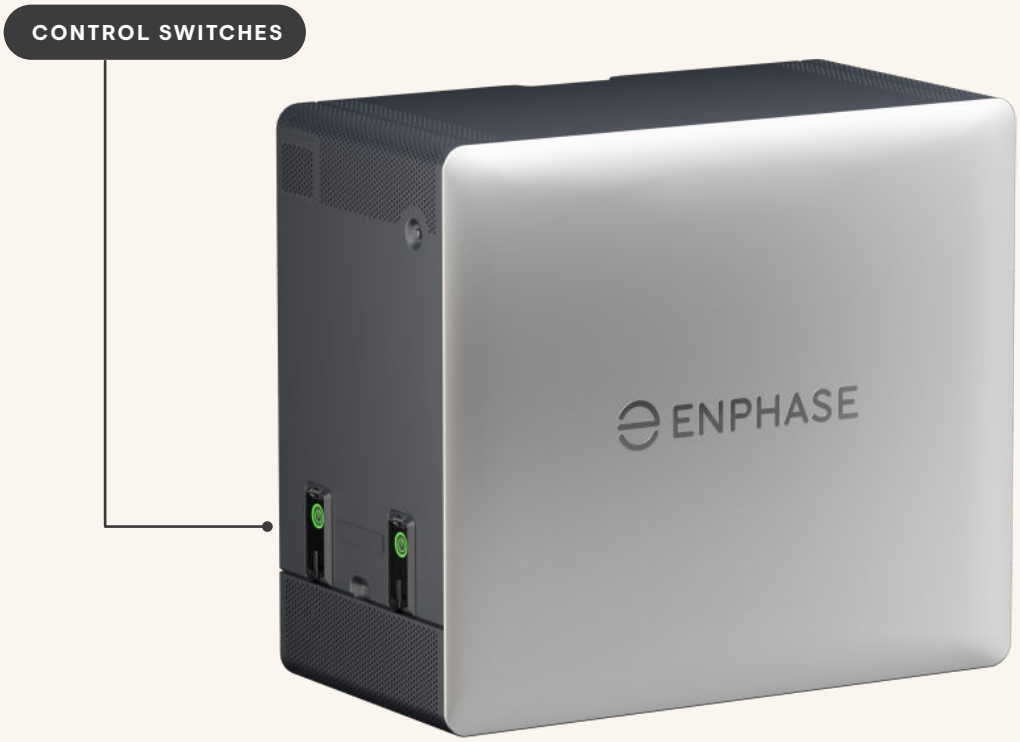

When to contact Enphase Support

If your system is not operating properly or has shut down unexpectedly, contact Enphase Support for guidance at https://support.enphase.com.

Your support agent will need details about the LED status on your system components. Be prepared to provide information on the LED indicators for both your IQ Battery 10C storage system and your IQ Combiner 6C (IQ Gateway).

You can check and record the color of all the LEDs on the front of the IQ Battery 10C units using the following table. If the IQ Battery 10C lights are solid or pulsing green or blue, your batteries are operating correctly.

IQ Battery 10C LED state

SOLID GREEN

Normal operation with greater than 75% system charge

BLUISH GREEN

Normal operation with greater than 50% system charge

GREENISH BLUE

Normal operation with greater than 25% system charge

SOLID BLUE

Normal operation with lesser than 25% system charge

FLASHING RED

The system is turning OFF

SOLID RED

Error state (Can be a system error, or lack of AC, or ESS emergency shutdown initiation)

SOLID YELLOW

Battery derated due to high operating temperature. This is normal when ambient temperatures are high.

FLASHING YELLOW

No communication with IQ Gateway

SOFT PULSE GREEN

Battery is charging

SOFT PULSE BLUE

Battery is discharging

Safety information

Read this first

This manual describes the safe use of the Enphase Energy System with IQ Batteries for a system owner. Do not remove the dead fronts (plastic guards inside the enclosure) from the IQ Combiner 6C. Do not open the IQ Battery 10C unit.

Safety and advisory symbols

To reduce the risk of electric shock and ensure the safe installation and operation of the Enphase Energy System, the following safety symbols appear throughout this document to indicate dangerous conditions and important safety instructions.

DANGER!

This indicates a hazardous situation, which, if not avoided, will result in death or serious injury. Use extreme caution and follow instructions carefully.

WARNING!

This indicates a situation where failure to follow instructions may be a safety hazard or cause equipment malfunction. Use extreme caution and follow instructions carefully.

NOTE

This indicates information important for optimal system operation. Follow instructions carefully.

Safety instructions

A battery can present a risk of electrical shock, fire, or explosion from vented gases. Only qualified electricians should install, troubleshoot, or replace the Enphase Energy System equipment or wiring.

If the Enphase Storage equipment generates smoke, remove AC power from the Enphase Energy System, and turn the switch on IQ Battery 10C to the OFF position, following the instructions in the manual.

In case of fire, use a standard or carbon dioxide fire extinguisher or another appropriate extinguisher to put out the fire.

Do not dispose of the IQ Battery 10C in a fire or by burning.

Do not allow or place flammable, sparking, or explosive items near the Enphase Storage system equipment.

During use, when stored, or during transport, keep the IQ Battery 10C in an area that is well ventilated, where the ambient temperature is between –20°C to 55°C (–4°F to 131°F).

Risk of electric shock. In areas where flooding is possible, install the Enphase Energy System equipment at a height that prevents water ingress.

Do not attempt to repair the Enphase Energy System equipment contains no user-serviceable parts. Do not open the IQ Battery 10C unit under the cover. Doing so will void the warranty. If the Enphase Energy System equipment fails, contact your solar installation professional or Enphase at https://enphase.com/support.

The IQ Battery 10C is designed for stationary installation only. It is not designed for mobile applications, such as installation on vehicles and trailers, and should not be used in such applications.

Risk of equipment damage. During use, storage, transport, or installation, always keep the Enphase Energy System equipment in an upright (top side up) position.

Do not install or use the Enphase Energy System equipment if it has been damaged in any way.

Do not place beverages or liquid containers on top of the Enphase Energy System equipment. Do not immerse Enphase Energy System equipment in liquids or flooding.

Protection against lightning and resulting voltage surges must be in accordance with local standards.

Using unapproved attachments or accessories could result in damage or injury.

IQ Battery 10C and IQ Combiner 6C are intended to operate with an internet connection. A Wi-Fi or Ethernet primary internet connection is required in addition to the cellular modem connectivity to ensure consistent connectivity.

During use, storage, and transport, keep the Enphase Storage equipment:

- Properly ventilated
- Away from the heat, sparks, and direct sunlight
- Away from excessive dust, corrosive and explosive gases, oil, and smoke
- Away from direct exposure to gas exhaust, such as from motor vehicles
- Free of vibrations
- Away from falling or moving objects, including motor vehicles
- At an elevation of fewer than 3,000 m (9,842 ft) above sea level
- In a location compliant with fire safety regulations (has a smoke detector)
- In a location compliant with local building codes and standards

To ensure optimal reliability and to meet warranty requirements, Enphase Energy System equipment must be installed and stored according to the instructions in Enphase Energy System equipment guides.

Read this entire document before using Enphase Energy Systems.

Do not sit on, place objects on, or insert objects into the Enphase Energy System equipment.

Revision history

REVISION	DATE	DESCRIPTION
USG-00129-2.0	January 2026	• Added IQ Meter Collar information. • Added a topic " Battery charging when CFG is disabled" in the Troubleshooting secion. • Updated the section " IQ Battery 10C LED state".
USG-00129-1.0	June 2025	Initial release.

USG-00129-2.0
© 2026 Enphase Energy. All rights reserved. Enphase, the e and CC logos, IQ, and certain other marks listed at https://enphase.com/trademark-usage-guidelines are trademarks of Enphase Energy, Inc. in the U.S. and other countries.
Data subject to change.

ENPHASE.