INSTALLATION AND OPERATION MANUAL

IQ8MC, IQ8AC, IQ8HC, and IQ8X Microinverters

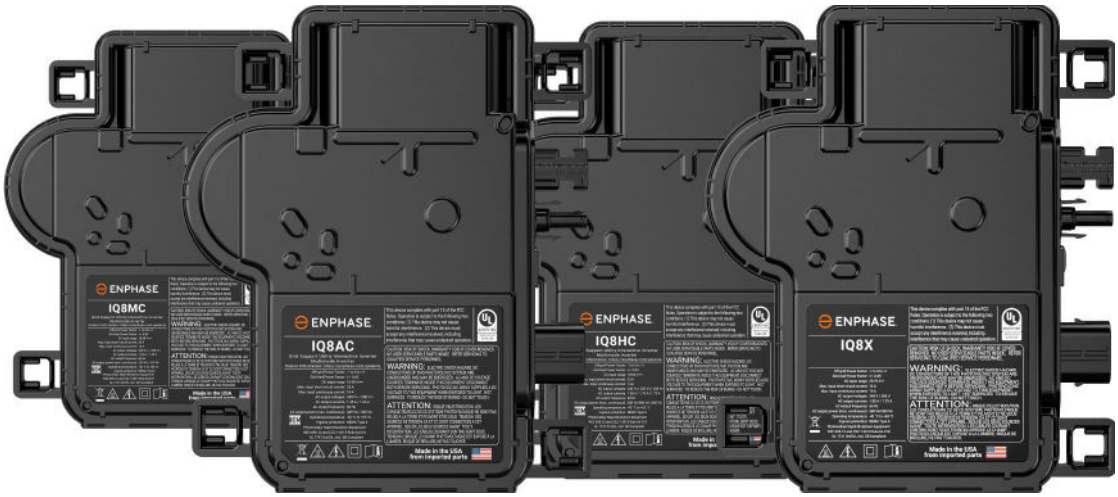

Applicable regions: North America

© 2026 Enphase Energy. All rights reserved. Enphase, the e and CC logos, IQ, and certain other marks listed at https://enphase.com/trademark-usage-guidelines are trademarks of Enphase Energy, Inc. in the U.S. and other countries. Data subject to change.

Contents

1 The Enphase Energy System 11
1.1 How the Enphase IQ8 Series Microinverters work 11
1.1.1 System monitoring 12
1.1.2 Optimal reliability 12
1.1.3 Ease of design 12
2 Planning for microinverter installation 12
2.1 Compatibility 13
2.2 Grounding considerations 13
2.3 Branch circuit capacity 14
2.4 Utility service requirements 14
2.5 Wire lengths and voltage rise 15
2.6 Lightning and surge suppression 15
3 Parts and tools required 15
3.1 Enphase equipment 15
3.2 Other items 16
4 Enphase microinverters installation 16
4.1 Position the IQ Cable 17
4.2 Position the junction box 17
4.3 Mount the microinverters 18
4.4 Create an installation map 19
4.5 Manage the cabling 20
4.6 Connect the microinverters 20
4.7 Terminate the unused end of the cable 21
4.8 Complete the installation of the junction box 22
4.9 Connect the PV modules 22
4.10 Set up and activate monitoring 22
5 Enphase Energy System configurations 23
5.1 Enphase Energy System PV solar grid-tied 24

© 2026 Enphase Energy Inc. All rights reserved.

5.2 Enphase Energy System PV solar grid-agnostic 25
5.3 Enphase Energy System PV solar + storage – whole home backup configuration..... 26
5.4 Enphase Energy System PV solar + generator configuration..... 27
5.5 Enphase Energy System PV solar + IQ Battery + generator configuration..... 27
6 Troubleshooting..... 27
6.1 Status LED indications and error reporting..... 28
6.1.1 LED operation..... 28
6.1.2 DC Resistance Low – Power Off condition..... 28
6.1.3 Other faults..... 29
6.2 Troubleshoot an inoperable microinverter..... 29
6.3 Disconnect a microinverter..... 30
6.4 Install a replacement microinverter..... 31
6.5 Enphase IQ Cable planning and ordering..... 32
6.5.1 Connector spacing options..... 32
6.5.2 IQ Cable options..... 32
6.6 Enphase IQ Cable accessories..... 32
7 Technical data..... 33
7.1 Technical considerations..... 33
7.2 Bifacial modules..... 33
8 Specifications..... 34
8.1 IQ8MC-72-M-US Microinverter specifications..... 34
8.2 IQ8AC-72-M-US Microinverter specifications..... 36
8.3 IQ8HC-72-M-US/IQ8HC-72-M-DOM-US Microinverter specifications..... 39
8.4 IQ8X-80-M-US/IQ8X-80-M-DOM-US Microinverter specifications..... 42
8.5 IQ Cable specifications..... 44
8.6 Enphase connector ratings..... 45
8.7 Enphase installation map..... 46
8.8 Sample wiring diagram (grid-tied system)..... 47
9 Revision history..... 47

© 2026 Enphase Energy Inc. All rights reserved.

Corporate headquarters contact information

Enphase Energy, Inc.
47281 Bayside Pkwy, Fremont, CA 94538,
United States of America, PH: +1 (707) 763-4784

https://enphase.com/contact/support

FCC compliance

This equipment has been tested and found to comply with the limits for a Class B digital device, pursuant to part 15 of the FCC Rules. These limits are designed to provide reasonable protection against harmful interference in a residential installation. This equipment generates, uses, and can radiate radio frequency energy and, if not installed and used in accordance with the instructions, may cause harmful interference to radio communications. However, there is no guarantee that interference will not occur in a particular installation. If this equipment does cause harmful interference to radio or television reception, which can be determined by turning the equipment off and on, you are encouraged to try to correct the interference by one or more of the following measures:

- Reorient or relocate the receiving antenna.
- Increase the separation between the equipment and the receiver.
- Connect the equipment to an outlet on a circuit different from that to which the receiver is connected.
- Consult the dealer or an experienced radio/TV technician for help.

Changes or modifications not expressly approved by the party responsible for compliance may void the user's authority to operate the equipment.

Other information

Product information is subject to change without notice. All trademarks are recognized as the property of their respective owners.

User documentation is updated frequently. Check the Enphase website for the latest information: https://enphase.com/installers/resources/documentation.

To ensure optimal reliability and to meet warranty requirements, the Enphase microinverter must be installed according to the instructions in this manual. For warranty text, refer to https://enphase.com/installers/resources/warranty.

For Enphase patent information, refer to https://enphase.com/patents.

Audience

This manual is intended for professional installation and maintenance personnel.

Important safety information

Read this first

This manual contains important instructions for use during the installation and maintenance of the IQ8 Series Microinverters.

IMPORTANT: IQ8 Series Microinverters require the IQ Cable. An IQ Gateway is needed to monitor the performance of the IQ Microinverters. The IQ accessories work only with IQ8 Series Microinverters.

Product labels

	Hot surface
	Refer to safety instructions
	Risk of electric shock
	Refer to the manual
	Double insulated

Safety and advisory symbols

To reduce the risk of electric shock and to ensure the safe installation and operation of the IQ8 Series Microinverters system, the following safety symbols appear throughout this document to indicate dangerous conditions and important safety instructions.

DANGER: This indicates a hazardous situation, which, if not avoided, will result in death or serious injury.

WARNING: This indicates a situation where failure to follow instructions may be a safety hazard or cause equipment malfunction. Use extreme caution and follow instructions carefully.

WARNING: This indicates a situation where failure to follow instructions may result in burn injury.

NOTE: This indicates information that is very important for optimal system operation. Follow instructions closely.

IQ8 Series Microinverters safety instructions

General safety

DANGER: Risk of electric shock. Risk of fire.

Only use electrical system components approved for wet locations.

Only qualified personnel should install, troubleshoot, or replace Enphase microinverters or IQ Cable and accessories.

Ensure that all AC and DC wiring is correct and that none of the AC or DC cables is pinched, shorted, or damaged. Also, ensure that all AC junction boxes are properly closed.

Do not exceed the maximum number of microinverters in an AC branch circuit listed in the manual. You must protect each microinverter AC branch circuit with a 20 A maximum breaker or fuse, as appropriate.

Do not use Enphase equipment in a manner not specified by the manufacturer. Doing so may cause death or injury to persons or damage to equipment.

Be aware that the installation of this equipment includes the risk of electric shock.

The DC conductors of this photovoltaic system are ungrounded and may be energized.

Always de-energize the AC branch circuit before servicing. Never disconnect the DC or AC connectors under load.

WARNING: Before installing or using the Enphase microinverter, read all instructions and cautionary markings in the technical description of the Enphase equipment and the photovoltaic (PV) equipment.

Do not connect Enphase microinverters to the grid or energize the AC circuit(s) until you have completed all the installation procedures and have received approval from the electrical utility.

When the PV array is exposed to light, DC voltage is supplied to the power conversion equipment (PCE).

Risk of equipment damage. Enphase male and female connectors must only be mated with the identical type and brand of male/female connector.

NOTE: To ensure optimal reliability and to meet warranty requirements, install the Enphase equipment according to the instructions in this manual.

Protection against lightning and resulting voltage surges must be in accordance with local standards.

Perform all electrical installations in accordance with all applicable local electrical codes, such as the Canadian Electrical Code, Part 1; ANSI requirements; and NFPA 70 (NEC).

DANGER: Risk of electric shock. Always de-energize the AC branch circuit before servicing. Never disconnect the DC or AC connectors under load. When the system has an IQ System Controller, then the RSD must be switched to the OFF/open position to de-energize the AC PV circuit.

Microinverter safety

WARNING: Risk of skin burn.

Microinverter safety

The chassis of the Enphase microinverter is the heat sink. Under normal operating conditions, the temperature could be 68°F (20°C) above ambient temperature, but under extreme conditions, the microinverter can reach a temperature of 194°F (90°C). To reduce the risk of burns, use caution when working with microinverters.

DANGER: Risk of fire.

The DC conductors of the PV module must be labeled PV Wire or PV Cable when paired with the Enphase microinverter.

DANGER: Risk of electric shock. Risk of fire.

Only qualified personnel may connect the Enphase microinverter to the utility grid.

Do not attempt to repair the Enphase microinverter; it contains no user-serviceable parts. If it fails, contact Enphase Support at https://enphase.com/contact/support to obtain a return merchandise authorization (RMA) number and start the replacement process. Tampering with or opening the Enphase microinverter will void the warranty.

WARNING: Risk of equipment damage.

Install the microinverter under the PV module to avoid direct exposure to rain, UV, and other harmful weather events. Always install the microinverter bracket side up. Do not mount the microinverter upside down. Do not expose the AC or DC connectors (on the IQ Cable, PV module, or microinverter) to rain or condensation before the connectors are mated.

The maximum open-circuit voltage of the PV module must not exceed the specified maximum input DC voltage of the Enphase microinverter. Refer to https://enphase.com/en-us/support/module-compatibility to verify PV module electrical compatibility with the microinverter. Use IQ8 Series Microinverters only with compatible PV modules per the Enphase compatibility calculator. Using an electrically incompatible PV module voids Enphase warranty.

You must match the DC operating voltage range of the PV module with the allowable input voltage range of the Enphase microinverter.

The Enphase microinverter is not protected from damage due to moisture trapped in cabling systems. Never mate microinverters to cables left disconnected and exposed to wet conditions. This voids the Enphase warranty.

The Enphase microinverter functions only with a standard, compatible PV module with appropriate fill factor, voltage, and current ratings. Unsupported devices include smart PV modules, fuel cells, wind or water turbines, DC generators, non-Enphase batteries, etc. These devices do not behave like standard PV modules, so operation and compliance are not guaranteed. These devices may also damage the Enphase microinverter by exceeding its electrical rating, making the system unsafe.

NOTE: The Enphase microinverter has field-adjustable voltage and frequency trip points that may need to be set, depending upon local requirements. Contact Enphase Support at https://enphase.com/contact/support for required modifications as per local requirements.

NOTE: Installers must check the manufacturing date of the products to ensure that the installation date is within one year of the manufacturing date of the products. Contact your local distributor to validate the date code.

Enphase IQ Cable safety

DANGER: Risk of electric shock.

Do not install the IQ Terminator while the power is connected.

WARNING: Risk of electric shock. Risk of fire.

When stripping the sheath from the IQ Cable, make sure the conductors are not damaged. If the exposed wires are damaged, the system may not function properly.

Do not leave AC connectors on the IQ Cable uncovered for an extended period. You must cover any unused connector with an IQ Sealing Cap.

Make sure a protective IQ Sealing Cap has been installed on all unused AC connectors. Unused AC connectors are live when the system is energized.

Use the IQ Terminator only once. If you open the IQ Terminator following installation, the latching mechanism is destroyed. If the latching mechanism is defective, do not use the IQ Terminator. Do not circumvent or manipulate the latching mechanism.

When installing the IQ Cable, secure any loose cables to minimize tripping hazards.

NOTE: When installing the IQ Cable and accessories, adhere to the following rules:

- Do not expose the IQ Terminator cap or cable connections to directed, pressurized liquid (water jets, and so on).
- Do not expose the IQ Terminator or IQ Cable to continuous immersion.
- Do not expose the IQ Terminator cap or IQ Cable connections to continuous tension (for example, tension due to pulling or bending the cable near the connection).
- Use only the connectors provided.
- Do not allow contamination or debris in the connectors.
- Use the IQ Terminator cap and cable connections only when all parts are present and intact.
- Do not install or use in potentially explosive environments.
- Do not allow the IQ Terminator to come into contact with an open flame.
- Fit the IQ Terminator cap using only the prescribed tools and in the prescribed manner.
- Only the IQ Terminator is used to seal the conductor end of the IQ Cable; no other method is allowed.

NOTE:

- Ensure proper routing of PV module DC cable using the clips to prevent the leads from resting on the roof. Do not wrap excess DC cable around the microinverter.
- Avoid direct exposure to sunlight.
- Avoid sharp edges on racking.
- Avoid cable contacting rough surfaces or moving parts within the racking system.
- Avoid overly tight bending radii. The minimum bend radius for the DC cable is eight times the cable's outer diameter.
- Avoid overly tight cable clips for routing.

DC cable safety

NOTE:

- Ensure proper routing of PV module DC cable using the clips to prevent the leads from resting on the roof. Do not wrap excess DC cable around the microinverter.
- Avoid direct exposure to sunlight.
- Avoid sharp edges on racking.
- Avoid cable contacting rough surfaces or moving parts within the racking system.
- Avoid overly tight bending radii. The minimum bend radius for the DC cable is eight times the cable's outer diameter.
- Avoid overly tight cable clips for routing.

PV Rapid Shutdown equipment (PVRSE)

This product is UL Listed as PV Rapid Shutdown equipment and conforms with NEC-2014, NEC-2017, NEC-2020, and NEC-2023 section 690.12, and C22.1-2018 Rule 64-218 Rapid Shutdown of PV systems for AC and DC conductors, when installed according to the following requirements:

- Microinverters and all DC connections must be installed inside the array boundary. Enphase further requires installing microinverters and DC connections under the PV module to avoid direct exposure to rain, UV, and other harmful weather events.
- The array boundary is defined as 1 ft. (305 mm) from the array in all directions or 3 ft. (1 m) from the point of entry inside a building.

This Rapid Shutdown system must have an initiating device or status indicator installed in a location accessible to first responders. Alternatively, it must be connected to an automatic system that initiates Rapid Shutdown when the system disconnects, or another emergency system is activated.

The initiator shall be listed and identified as a disconnecting means that plainly indicates whether it is in the OFF or ON position.

- When installed with the IQ System Controller, PV system disconnecting means RSD—The Enphase System Shutdown Switch provides the functionality of Rapid Shutdown as mandated by NEC when it is used with IQ System Controller 2, which has IQ8 Series Microinverters connected to it. For more information on Rapid Shutdown, refer to the *Rapid Shutdown FAQ* at https://support.enphase.com/s/article/RSD-wiring-FAQs.
- In a grid-tied PV-only system, service disconnecting means a readily accessible switch or circuit breaker.

The handle position of a switch or circuit breaker is suitable for use as an indicator. For more information, refer to NEC or CSA C22.1-2018.

Additionally, in a prominent location near the initiator device, a placard or label must be provided with a permanent marking including the following wording:

PHOTOVOLTAIC SYSTEM EQUIPPED WITH RAPID SHUTDOWN. The term **PHOTOVOLTAIC** may be replaced with **PV**.

The placard, label, or directory shall be reflective, with all letters capitalized and having a minimum height of ⅜ in (9.5 mm) in white on a red background.

Anti-islanding methodology

The anti-islanding methodology used by Enphase IQ8 Series Microinverters is UL Listed and tested in accordance with IEEE 1547-2018 and UL 1741-SB.

IQ8 Series Microinverter uses the Group 1 method of anti-islanding based on the definitions provided in the following list, as defined in Sand2018-8431, July 2018:

- Group 1: Frequency Shift with continuous positive frequency feedback
- Group 2A: Frequency Shift with discontinuous or stepped positive frequency feedback
- Group 2B: Frequency Shift similar to Group 2A except with a dead zone around 60 Hz
- Group 2C: Frequency Shift with unidirectional frequency feedback
- Group 3: Monitors the change of impedance
- Group 4: Monitors shift at a harmonic frequency (multiple of the fundamental)
- Group 5: Passive methods like rate of change of frequency, vector shift
- Group 6: Produces negative sequence current and monitors the voltage

For any questions, contact https://enphase.com/contact/support.

1. The Enphase Energy System

The Enphase Energy System includes:

- IQ8MC, IQ8AC, IQ8HC, and IQ8X Microinverters: The smart, grid-ready IQ8 Series Microinverters that convert the DC output of the PV module into grid-compliant AC power.
- IQ Gateway (ENV-IQ-AM1-240, ENV2-IQ-AM1-240): Required to monitor solar production, propagate a grid profile to the microinverters, and provide microinverter control at sites where power export limitation (PEL) and/or phase imbalance management (PIM) is required through advanced grid functionalities. The IQ Gateway is a communication device that provides network access to the PV array. The IQ Gateway collects production and performance data from the Enphase IQ Microinverters over on-site AC power lines and transmits the data to the Enphase App through a broadband or cellular connection. The IQ Gateway can monitor up to 600 Enphase IQ Microinverters and up to 39 IQ Batteries.

  NOTE: All installations require that you use the IQ Gateway to commission the microinverters to propagate correct grid profile settings. This will also ensure that the microinverter's firmware is upgraded whenever a newer version is available.
- Enphase Installer Platform: This is web-based monitoring and management software. Installers can use it to view detailed performance data, manage multiple PV systems, and remotely resolve issues that might impact system performance. For more information, refer to https://enphase.com/installers/apps.
- Enphase Installer App: A mobile app for iOS and Android devices. It allows installers to configure the system on-site, eliminating the need for a laptop and improving installation efficiency. You can use the app to:
  - Connect to the IQ Gateway over a wireless network for faster system setup and verification.
  - View and email a summary report that confirms a successful installation.
  - Scan device serial numbers and sync system information with the Enphase Installer Platform.
- IQ Battery: Offers energy storage solutions.
- IQ Field Wireable Connectors (Q-CONN-10F and Q-CONN-10M): You can make connections from any IQ Cable or open IQ Field Wireable Connector.

This manual describes the safe installation and operation of the IQ8 Series Microinverters.

NOTE: Enphase microinverters must be installed according to the instructions in this manual to ensure optimal reliability and meet warranty requirements.

1.1 How the Enphase IQ8 Series Microinverters work

The Enphase microinverter maximizes energy production using a sophisticated maximum power point tracking (MPPT) algorithm. Each Enphase microinverter individually connects to one PV module in your array. This configuration enables an individual MPPT to control each PV module, ensuring that the maximum power available from each PV module is produced regardless of the performance of the other PV modules in the array. While an individual PV module in the array may be affected by shading, soiling, orientation, or mismatch, each Enphase microinverter ensures top performance for its associated PV module.

© 2026 Enphase Energy Inc. All rights reserved.

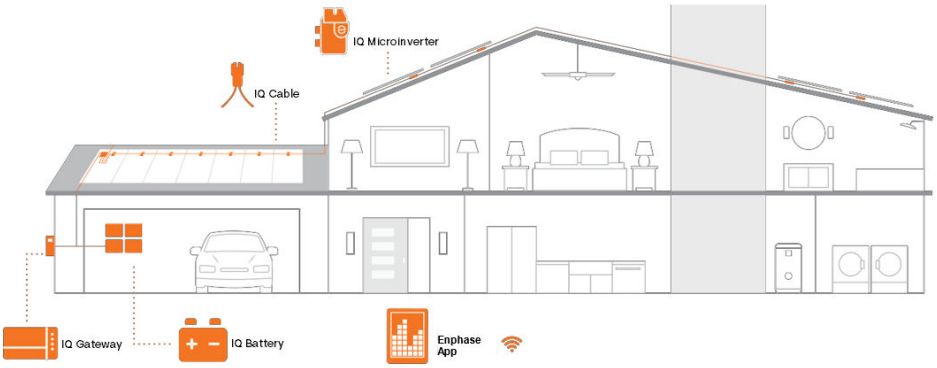

1.1.1 System monitoring

After you install the IQ Gateway and provide an internet connection through a broadband router or modem, the IQ8 Series Microinverters automatically begin reporting to the Enphase Installer Platform. Enphase Installer Platform presents current and historical system performance trends and informs you of PV system status.

1.1.2 Optimal reliability

Microinverter systems are inherently more reliable than conventional string inverters. The distributed nature of a microinverter system ensures no single point of system failure in the PV system. Enphase microinverters are designed to operate at full power at ambient temperatures as high as 65°C (149°F).

1.1.3 Ease of design

PV systems using Enphase microinverters are very simple to design and install. Unlike conventional string inverters, you will not need to perform cumbersome string sizing calculations. You can install individual PV modules in any combination of PV module quantity, type, age, and orientation. Each microinverter quickly mounts on the PV racking directly beneath each PV module. Low-voltage DC wires connect from the PV module directly to the co-located microinverter, eliminating the risk of personnel exposure to dangerously high DC voltage.

2. Planning for microinverter installation

The microinverters install quickly and easily. The microinverter housing is designed for outdoor installation and complies with the NEMA 250, type 6 environmental enclosure rating standard.

NOTE: NEMA 6 rating definition: Indoor or outdoor use primarily to provide protection against hose-directed water, the entry of water during occasional temporary submersion at a limited depth, and damage from external ice formation.

The IQ Cable has connector spacing options to accommodate the installation of PV modules in portrait or landscape orientation. Refer to Enphase IQ Cable planning and ordering on page 32 for information on IQ Cable ordering.

© 2026 Enphase Energy Inc. All rights reserved.

2.1 Compatibility

The IQ8 Series Microinverters are electrically compatible with PV modules, as listed in the following table. There is no enforced DC/AC ratio and maximum DC input power limit. Modules can be paired if the open-circuit voltage (V_{OC}) and short-circuit current (I_{SC}) of the PV module at the extreme temperatures (lowest temperature for voltage and highest temperature for current) do not exceed the microinverter's maximum input DC voltage and maximum module I_{SC} specifications, respectively. For specifications, see the Specifications section. You can refer to the Enphase compatibility calculator at https://enphase.com/en-us/support/module-compatibility to verify the electrical compatibility of the PV module. To ensure mechanical compatibility, the microinverter's male and female connectors must only be mated with the identical type and brand of male and female connectors.

WARNING: Risk of fire. The DC conductors of the PV module must be labeled **PV Wire** or **PV Cable** to comply with the NEC for Ungrounded PV Power Systems.

Microinverter model	Connector type	Module compatibility
IQ8MC-72-M-US	Stäubli MC4	To meet compatibility, PV modules must be within the following maximum input DC voltage and maximum module I_{sc}. Module compatibility can be checked at https://enphase.com/installers/microinverters/calculator.
IQ8AC-72-M-US		
IQ8HC-72-M-US/ IQ8HC-72-M-DOM-US		
IQ8X-80-M-US/ IQ8X-80-M-DOM-US		

NOTE: IQ8 Series Microinverters can be added to existing IQ7 systems on the same IQ Gateway/IQ Combiner only in the following configurations: (i) Solar Only or (ii) Solar Plus Battery (IQ Battery 3/10 or IQ Battery 3T/10T or IQ Battery 5P) grid-tied or with backup with IQ System Controller 3/3G/3M and IQ Meter Collar.

NOTE: IQ7 Series Microinverters cannot be added to a site with existing IQ8 Series Microinverters on the same gateway.

NOTE: A mixed system of IQ7 Microinverters and IQ8 Microinverters will not support IQ8-specific PCS and sunlight jump-start features.

NOTE: The rated continuous power output of the IQ7 Microinverter and IQ8 Microinverter arrays must not exceed 150% of the IQ Battery's rated power output. If the microinverter array exceeds this ratio, PV shedding must be implemented to shed excess PV when the system transitions to the off-grid mode.

2.2 Grounding considerations

The Enphase microinverter models listed in this guide do not require grounding electrode conductors (GEC), equipment grounding conductors (EGC), or grounded conductors (neutral). Your Authority Having Jurisdiction (AHJ) may require you to bond the mounting bracket to the racking. If so, use the UL 2703 hardware or star washers. The microinverter has a Class II double-insulated rating, including ground fault protection (GFP). Only PV modules equipped with DC cables labeled **PV Wire** or **PV Cable** are used to support GFP.

© 2026 Enphase Energy Inc. All rights reserved.

2.3 Branch circuit capacity

Plan your AC branch circuits to meet the following limits for the maximum number of microinverters per branch when protected with a 20 A (maximum) overcurrent protection device (OCPD).

Maximum[1] IQ8 Series Microinverters per AC branch circuit				
Grid voltage	**IQ8MC**	**IQ8AC**	**IQ8HC**	**IQ8X**
(240 VAC)	12	11	10	10
(208 VAC)	10	9	9	9
(220 VAC)	NA	NA	9[2]	NA

NOTE: For a mixed system with both IQ7 and IQ8 Microinverters on the same branch, ensure that the total maximum continuous output current of all microinverters on the branch does not exceed 16 A.

2.4 Utility service requirements

The IQ8 Series Microinverters work with single-phase service. Measure AC line voltages at the electrical utility connection to confirm that it is within the ranges in the following table.

Single-phase	
L1 to L2	211 to 264 VAC
L1, L2 to ground	106 to 132 VAC
208 VAC, single-phase	
L1 to L2	183 to 229 VAC
L1, L2 to ground	106 to 132 VAC
220 VAC, single-phase[2]	
L1 to L2	198 to 264 VAC
L1, L2 to ground	106 to 132 VAC

NOTE: All installations require that you use the IQ Gateway to commission the microinverters to propagate correct grid profile settings. This will also ensure that the microinverter's firmware is upgraded whenever a newer version is available.

[1] Limits may vary. Refer to local requirements to define the number of microinverters per branch in your area.
[2] Only IQ8HC Microinverter supports a 220 V grid in Mexico.

© 2026 Enphase Energy Inc. All rights reserved.

2.5 Wire lengths and voltage rise

When planning the system, select the appropriate AC conductor size to minimize voltage rise. Select the correct wire size based on the distance from the microinverter AC branch circuit's beginning to the load center breaker. Enphase recommends a voltage rise of less than 2% for the sections from the microinverter AC branch circuit to the load center breaker.

Enphase provides guidance for choosing wire size and maximum conductor lengths in the *Calculating AC Line Voltage Rise for IQ Series Microinverters with IQ Cable* at https://enphase.com/download/calculating-ac-line-voltage-rise-iq-series-microinverters-iq-cable-tech-brief. Refer to this technical brief for voltage rise values in the IQ Cables and instructions on calculating voltage rise in other wire sections of the system.

Standard guidelines for voltage rise on feeder and AC branch circuit conductors might not be sufficient for microinverter AC branch circuits that contain the maximum allowable microinverters. This is due to the high inherent voltage rise on the AC branch circuit.

NOTE: The best practice is to center-feed the branch circuit to minimize voltage rise in a fully populated branch. This practice greatly reduces the voltage rise as compared with an end-fed branch. To center-feed a branch, divide the circuit into two sub-branch circuits protected by a single OCPD.

2.6 Lightning and surge suppression

Enphase microinverters have integral surge protection, which is greater than that of most traditional inverters. However, if the surge has sufficient energy, the protection built into the microinverter can be exceeded, and the equipment can be damaged. For this reason, Enphase recommends that you protect your system with a lightning and/or surge suppression device. In addition to having some level of surge suppression, it is also important to have insurance that protects against lightning and electrical surges. Enphase has tested the following devices:

- Leviton 51110-SRG
- Schneider SquareD HEPD50

NOTE: Protection against lightning and resulting voltage surges must be per local standards.

3. Parts and tools required

In addition to the microinverters, PV modules, and racking, you will need the following.

3.1 Enphase equipment

- IQ Gateway: Required to monitor production. IQ Gateway (model ENV-IQ-AM1-240, ENV2-IQ-AM1-240) communications gateway or IQ Combiner (model X-IQ-AM1-240-B, X-IQ-AM1-240-2, X2-IQ-AM1-240-4C, X2-IQ-AM1-240-4, X-IQ-AM1-240-4C, X-IQ-AM1-240-4).

© 2026 Enphase Energy Inc. All rights reserved.

- Enphase Installer App: Download the Enphase Installer App, open it, and log in to your Enphase Account. Later, it can scan microinverter serial numbers and connect to the IQ Gateway to track system installation progress. Go to https://enphase.com/installers/apps or scan the QR code to download it.



- Tie wraps or IQ Cable Clips (Q-CLIP-100)
- IQ Sealing Cap (Q-SEAL-10) for any unused drops on the IQ Cable.
- IQ Terminator (Q-TERM-10) typically requires two units per branch circuit.
- IQ Disconnect Tool (Q-DISC-10)
- IQ Field Wireable Connectors (male and female: Q-CONN-10M and Q-CONN-10F)
- IQ Cable:

Cable model	Connector spacing	PV module orientation	Connector count per box
Q-12-10-240	50 in (1.3 m)	Portrait	240
Q-12-17-240	78 in (2.0 m)	Landscape (60-cell)	240
Q-12-20-200	90 in (2.3 m)	Landscape (72-cell)	200

3.2 Other items

- AC junction box
- Number 2 and 3 screwdrivers
- Wire cutters, voltmeter
- Torque wrench, sockets, and wrenches for mounting hardware
- Power drill or impact driver

4. Enphase microinverters installation

Installing the IQ8 Series Microinverters involves several key steps. Each step is detailed in the following sections.

1. Position the IQ Cable
2. Position the junction box
3. Mount the microinverters
4. Create an installation map
5. Manage the cabling
6. Connect the microinverters
7. Terminate the unused end of the cable
8. Complete the installation of the junction box
9. Connect the PV modules

© 2026 Enphase Energy Inc. All rights reserved.

10. Energize the system

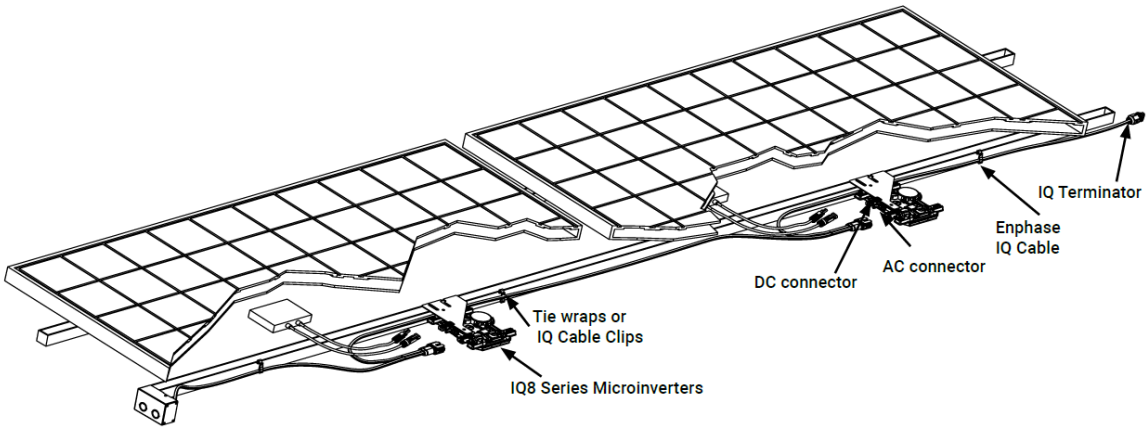

Figure 1: Horizontal mount

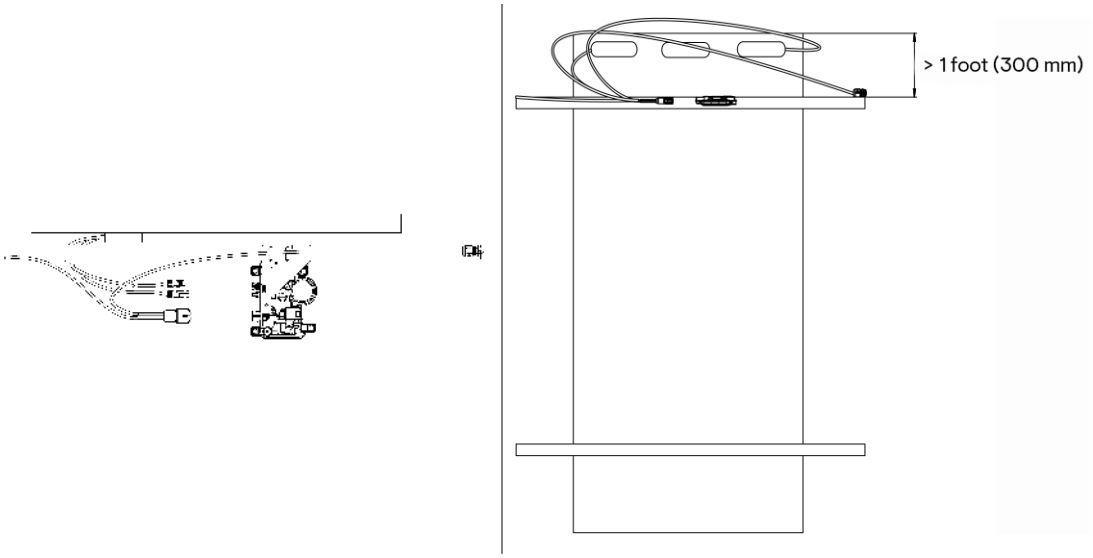

Figure 2: Vertical mount

4.1 Position the IQ Cable

- Plan each cable segment so that drop connectors on the IQ Cable align with each PV module. Allow extra length for slack, cable turns, and obstructions.
- Mark the approximate centers of each PV module on the PV racking.
- Lay out the cabling along the installed racking for the AC branch circuit.
- Cut each segment of cable to meet your planned needs.

WARNING: When transitioning between rows, secure the cable to the rail to prevent cable or connector damage. Do not count on the connector to withstand tension.

4.2 Position the junction box

1. Verify that the AC voltage at the site is within range.

© 2026 Enphase Energy Inc. All rights reserved.

Service type and voltage: L1-L2	
240 VAC split-phase	211 to 264 VAC
208 VAC single-phase	183 to 229 VAC
220 VAC single-phase[3]	198 to 264 VAC

NOTE: All installations require that you use the IQ Gateway to commission the microinverters to propagate correct grid profile settings. This will also ensure that the microinverter's firmware is upgraded whenever a newer version is available.

2. Install a junction box at a suitable location on the racking.
3. Provide an AC connection from the junction box back to the electricity network using equipment and practices as local jurisdictions require.

4.3 Mount the microinverters

1. The microinverters should be mounted beneath the modules, either horizontally bracketed side up or vertically oriented. They must be protected from direct exposure to rain, UV, and other harmful weather events. For clearance requirements during vertical mounting, see Figure 2 on page 19.
   - Always place the microinverter under the PV module, protected from direct exposure to rain, sun, and other harmful weather events. Allow a minimum of ¾ in (1.9 cm) between the roof and the microinverter. Also, allow ½ in (1.3 cm) between the back of the PV module and the top of the microinverter.
   - For a vertical mount, maintain a clearance of >12 in (30 cm) from the edges of the PV module to protect the microinverter from direct exposure to rain, UV, and other harmful weather events.

   WARNING: Install the microinverter under the PV module to avoid direct exposure to rain, UV, and other harmful weather events. Do not mount the microinverter upside down.
2. Torque the microinverter fasteners as follows. Do not over-torque.
   - ¼ in (6 mm) mounting hardware: 45 in-lb to 50 in-lb (5 N m)
   - 5/16 in (8 mm) mounting hardware: 80 in-lb to 85 in-lb (9 N m)
   - When using UL 2703 mounting hardware, use the manufacturer's recommended torque value.

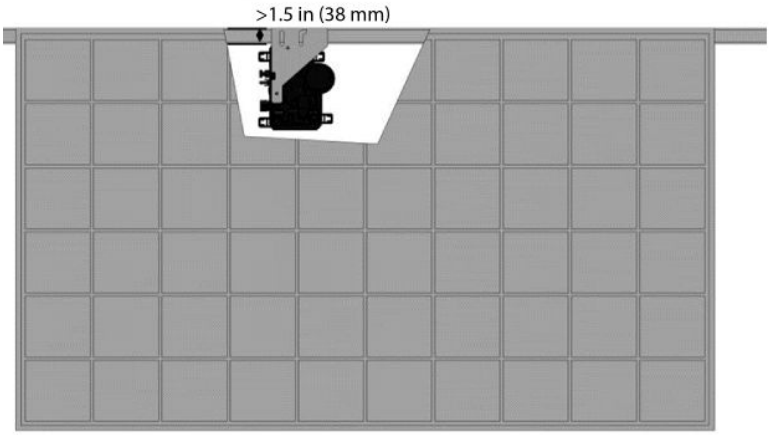

Figure 3: Horizontal mount

[3] Only IQ8HC supports 220 V grid in Mexico.

© 2026 Enphase Energy Inc. All rights reserved.

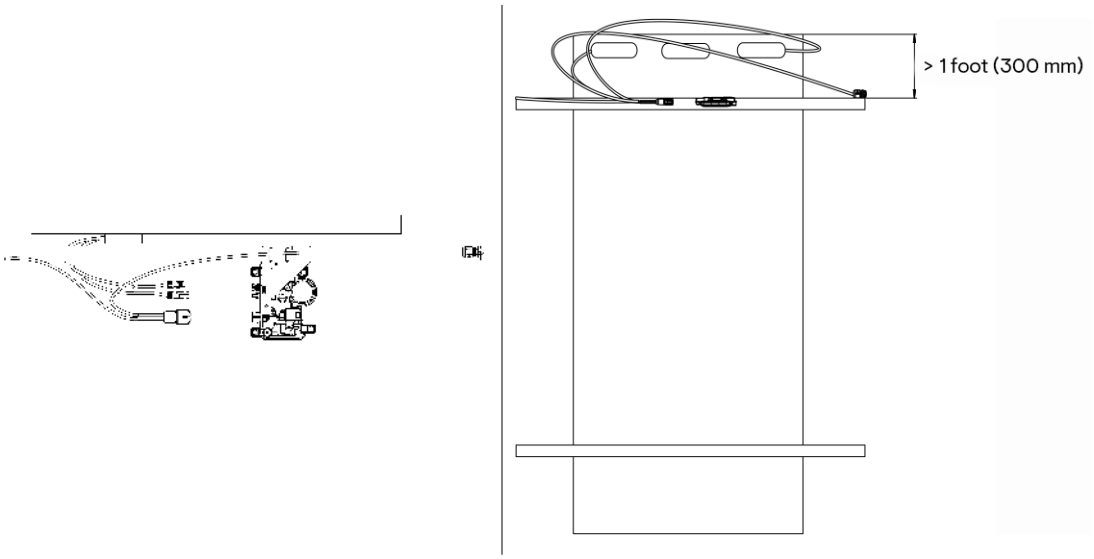

Figure 4: Vertical mount

4.4 Create an installation map

The Enphase installation map is a diagram of the physical location of each microinverter in your PV array. Copy or use the blank map in the Enphase installation map on page 46 to record the microinverter placement for the system, or provide your layout if you require a larger or more intricate installation map.

Each Enphase microinverter, IQ Gateway, and IQ Battery has a removable serial number label. Build the installation map by peeling the labels from the microinverter mounting plates and placing them on the map. After installation, you should place the IQ Gateway and the IQ Battery serial numbers on the map.

After creating the installation map, use the Enphase Installer App to record serial numbers and configure the system.

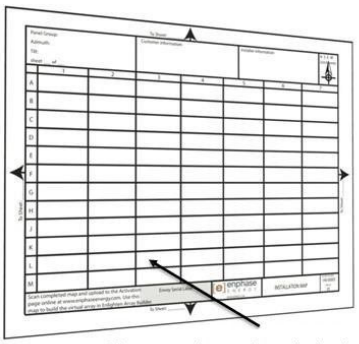
Affix serial number labels

For details, refer to the “Detect the microinverters” section in the help topics of the Enphase Installer App.

1. Peel the removable serial number label from each microinverter and affix it to the respective location on the paper installation map.

© 2026 Enphase Energy Inc. All rights reserved.

2. Peel the label from the IQ Gateway and any IQ Battery (if installed) and affix it to the installation map.
3. Always keep a copy of the installation map for your records.

4.5 Manage the cabling

1. Use cable clips or tie wraps to attach the cable to the racking. Leave no more than 6 ft. (1.8 m) between cable clips or tie wraps.

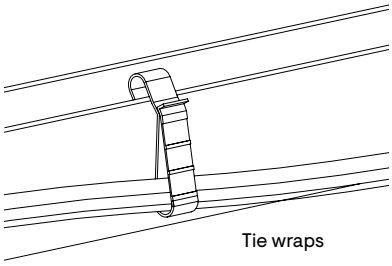

Tie wraps

2. Dress any excess cabling in loops to avoid contacting the roof. Do not form loops smaller than 4¾ in (12 cm) in diameter.

WARNING: Tripping hazard. Loose cables can become a tripping hazard. Dress the IQ Cable to minimize this potential.

4.6 Connect the microinverters

1. Connect the microinverter. Listen for a click as the connectors engage.
2. Cover any unused connectors on the IQ Cable with the IQ Sealing Cap. Listen for a click as the connectors engage.

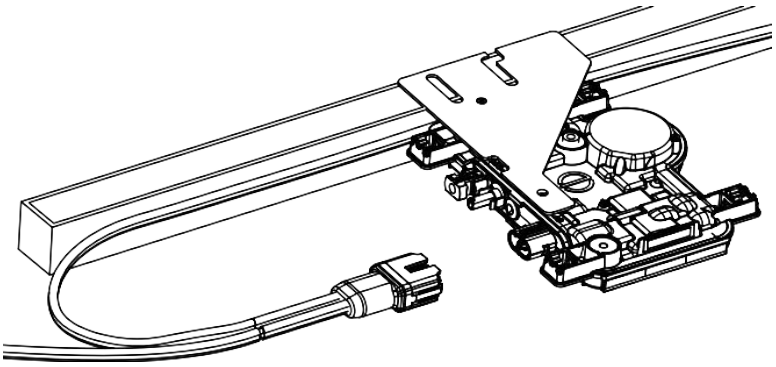

WARNING: Risk of electric shock. Risk of fire. Install IQ Sealing Caps on all unused AC connectors, as these connectors become live when the system is energized. IQ Sealing Caps are required for protection against moisture ingress.

NOTE: If you need to remove an IQ Sealing Cap, use the IQ Disconnect Tool. Refer to Disconnect a microinverter on page 30 for more information.

© 2026 Enphase Energy Inc. All rights reserved.

4.7 Terminate the unused end of the cable

Terminate the unused end of the IQ Cable as follows.

1. Remove ½ in (13 mm) of the cable sheath from the conductors. Use the IQ Terminator loop to measure ½ in (13 mm).

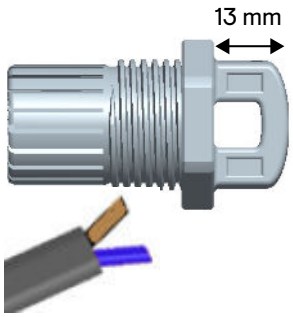

2. Slide the hex nut onto the cable.
3. Insert the cable into the IQ Terminator body so that each of the two wires lands on opposite sides of the internal separator. There is a grommet inside the hex nut that should remain in place.

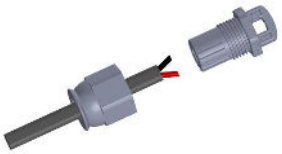

4. Insert a screwdriver into the slot on the top of the IQ Terminator to hold it in place and torque the nut to 61.95 in-lb (7 N m).

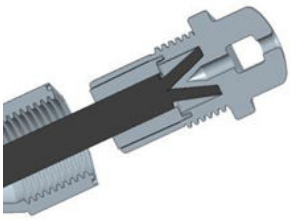

5. Hold the IQ Terminator body stationary with the screwdriver and turn only the hex nut to prevent the conductors from twisting from the separator.



NOTE: Turn only the hex nut to prevent conductors from twisting from the separator.

6. Attach the IQ Terminated cable end to the PV racking with a cable clip or tie wrap so that the cable and IQ Terminator do not touch the roof.

WARNING: The IQ Terminator cannot be reused. If you unscrew the nut, you must discard the IQ Terminator.

© 2026 Enphase Energy Inc. All rights reserved.

4.8 Complete the installation of the junction box

1. Connect the IQ Cable to the junction box.
2. Wire colors: L1-Black; L2-Red. Refer to Sample wiring diagram (grid-tied system) on page 47 for more information.

4.9 Connect the PV modules

WARNING: Electrical shock hazard. The DC conductors of this photovoltaic system are ungrounded and may be energized.

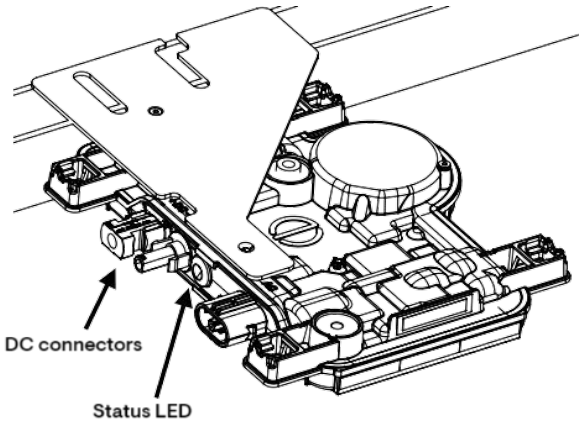

1. If required, attach the Enphase DC bulkhead adaptors to the microinverters. Ensure they are fully seated. Do not reverse the adaptor connections.
2. Connect each PV module's DC leads to the corresponding microinverter's DC input connectors.
3. Check the LED on the connector side of the microinverter. The LED flashes green six times when DC power is applied.
4. Mount the PV modules above the microinverters.

4.10 Set up and activate monitoring

Refer to the *IQ Gateway quick install guide* at https://enphase.com/installers/resources/documentation/communication to install the IQ Gateway and set up system monitoring and grid management functions. This guide leads you through the following:

- Connecting the IQ Gateway
- Detecting devices
- Connecting to the Enphase Installer Platform
- Registering the system
- Building the virtual array

NOTE: When the utility requires a profile other than the default IEEE 1547 (for example, grids managed by Hawaii Electric Industries [HEI], including HECO), you must select an appropriate grid profile for your installation.

© 2026 Enphase Energy Inc. All rights reserved.

You can set the grid profile anytime through the Enphase Installer Platform, during system registration, or through the Enphase Installer App. You must have an IQ Gateway to set or change the grid profile. For more information on setting or changing the grid profile, refer to the *IQ Gateway installation and operation manual* at https://enphase.com/installers/resources/documentation/communication.

5. Enphase Energy System configurations

The following are common system configurations possible with the Enphase Energy System using IQ8 (IQ8MC/IQ8AC/IQ8HC/IQ8X) Microinverters.

- PV solar grid-tied
- PV solar grid-agnostic
- PV solar + storage
- PV solar + generator
- PV solar + storage + generator

Based on the system configuration, the Enphase Energy System includes the following Enphase products:

- IQ Battery system: An all-in-one AC-coupled storage system that includes embedded, grid-forming multimode microinverters. You can connect multiple IQ Battery systems to maximize potential backup for homes. The IQ Battery 3 storage system allows customers to start small and add capacity incrementally. IQ Battery systems cannot be used with grid voltages of 208 V or three-phase services.
- IQ System Controller 2: The Enphase Energy System includes the IQ System Controller with microgrid interconnection device (MID) capability, which consolidates interconnection equipment into a single enclosure and streamlines grid-independent capabilities of PV and storage installations by providing a consistent, pre-wired solution for residential applications. Along with MID functions, it includes PV, storage, and generator input circuits. It allows IQ Battery storage systems to form an intentional island (per IEEE 1547.4 definition) and contains a neutral-forming transformer (NFT) to enable 120/240 V operation in the backup mode.
- Wireless Communications Kit: Enables direct communication between the IQ Battery, IQ System Controller, and the Gateway using a 2.4 GHz frequency. The kit is connected to one of the USB ports on the IQ Gateway.
- Mobile Connect: To ensure the best performance of your system, a Mobile Connect cellular modem is required unless already present. The cellular modem connects to a USB port on the IQ Gateway.
- For new or retrofit systems with IQ Series Microinverters:
  - IQ8 (IQ8MC/IQ8AC/IQ8HC/IQ8X) Series Microinverters and accessories. Enphase Energy System technology is fully compatible with the IQ8 Series Microinverters.
  - IQ Gateway: It is a communications gateway with IQ8 Series Microinverters, IQ Batteries, and the IQ System Controller smart switch. It collects system performance information and transmits it over the internet to Enphase Cloud. An IQ Gateway is required for Enphase Energy Systems with IQ Series Microinverters.

    NOTE: The IQ Gateway is included in an IQ Combiner.
  - IQ Combiner: This product consolidates interconnection equipment into a single enclosure and streamlines PV and storage installations by providing a consistent, pre-wired solution for residential applications. It includes the IQ Gateway. Install the new communication kit in any IQ Combiner to enable wireless communication with the IQ Battery and the IQ System Controller.

© 2026 Enphase Energy Inc. All rights reserved.

5.1 Enphase Energy System PV solar grid-tied

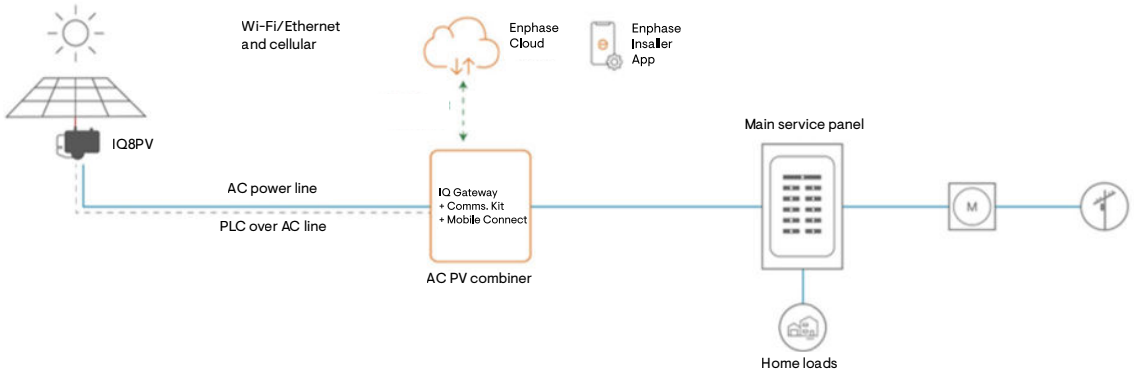

For the grid-tied mode, after the IQ8 PV Microinverter installation, energize the system:

1. Turn on the AC disconnect or circuit breaker for the branch circuit.
2. Turn on the main utility-grid AC circuit breaker. Your system starts producing power after a five-minute wait time.
3. Check the LED on the connector side of the microinverter.

LED color	Indication
Flashing green	Normal operation. AC grid function is normal, and there is communication with the IQ Gateway.
Flashing orange	The AC grid is normal, but there is no communication with the IQ Gateway.
Flashing red	The AC grid is either not present or not within the specification.
Solid red	There is an active **DC Resistance Low, Power Off Condition**. To reset, see DC Resistance Low – Power Off condition on page 28.

To install the IQ Gateway and set up system monitoring and grid management functions, refer to the *IQ Gateway quick install guide* at https://enphase.com/installers/resources/documentation/communication.

© 2026 Enphase Energy Inc. All rights reserved.

5.2 Enphase Energy System PV solar grid-agnostic

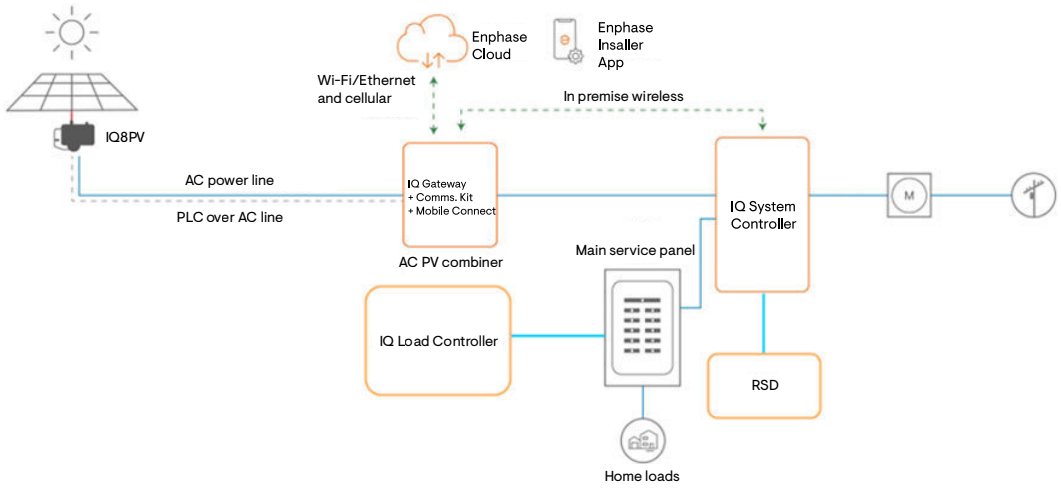

In the PV Solar grid-agnostic configuration in Enphase Energy System, the IQ System Controller is installed on the line side of the main load panels. This allows a properly sized Enphase Energy System to provide power to all loads in the main load panel in the event of a grid outage and PV solar presence. The IQ System Controller can be configured with a main breaker to act as the service disconnecting means in this configuration. The PV system shall be interconnected to the IQ System Controller on a dedicated breaker. This configuration typically supports larger PV system sizes and may allow for avoiding expensive utility service and/or main service panel upgrades.

System commissioning for a grid-agnostic configuration should be done with grid power present. During the IQ8 PV installation, ensure all relays are open from the main panel and the IQ System Controller. When commissioned, the IQ System Controller gets powered on from the grid side of the microgrid interconnect device (MID); it closes the MID relay and the PV relay. IQ8 PV shall start producing power in the grid-tied mode with the IQ Gateway powered on. Follow the Enphase Energy System commissioning process using the Enphase Installer App for system commissioning.

© 2026 Enphase Energy Inc. All rights reserved.

5.3 Enphase Energy System PV solar + storage – whole home backup configuration

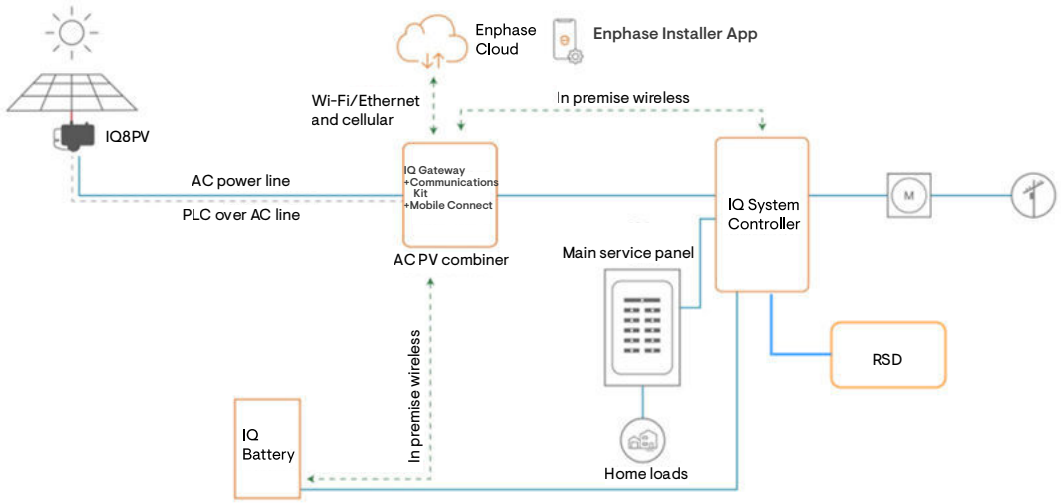

In the home (main load panel) backup configuration, the IQ System Controller is installed on the line side of the main load panels rated up to 200 A. This allows a properly sized Enphase Energy System to provide power to all loads in the main load panel in the event of a grid outage. The IQ System Controller can be configured with a main breaker to act as the service disconnecting means in this configuration. The PV system can be connected to the IQ System Controller on a dedicated breaker or to the main load panel. This configuration typically supports larger PV and storage system sizes and may allow for avoiding expensive utility service and/or main service panel upgrades.

The above configuration can also work with a genset connected to the IQ System Controller with or without an IQ Battery. The following two figures illustrate the connection configurations.

© 2026 Enphase Energy Inc. All rights reserved.

5.4 Enphase Energy System PV solar + generator configuration

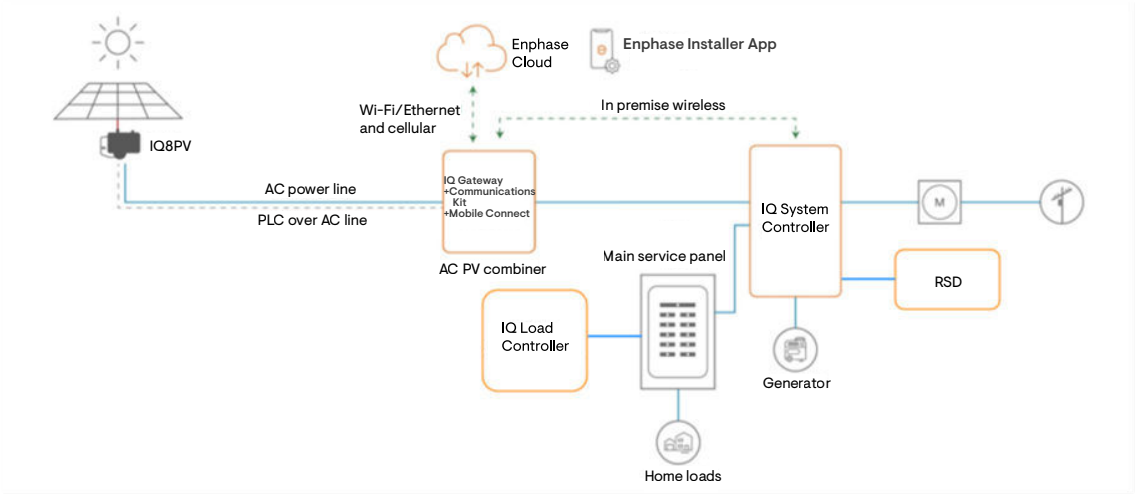

5.5 Enphase Energy System PV solar + IQ Battery + generator configuration

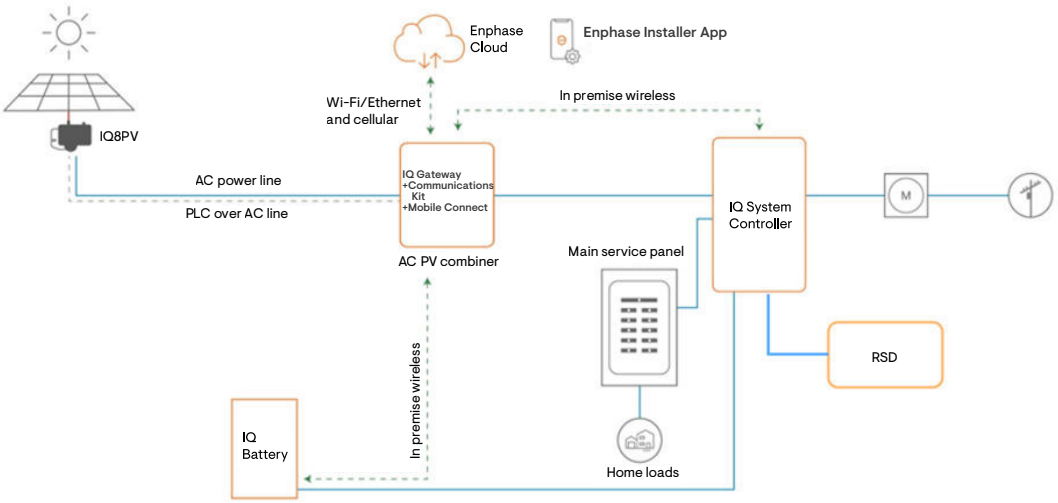

6. Troubleshooting

Follow all the safety measures described in this manual. If the PV system does not operate correctly, qualified personnel can use the following troubleshooting steps.

⚠ **WARNING:** There is a risk of electric shock. Do not attempt to repair the Enphase microinverter; it contains no user-serviceable parts. If it fails, contact https://enphase.com/contact/support

© 2026 Enphase Energy Inc. All rights reserved.

to obtain a return merchandise authorization (RMA) number and start the replacement process.

6.1 Status LED indications and error reporting

The following section describes LED indications.

6.1.1 LED operation

LED color	Indication
Flashing green	Normal operation. AC grid function is normal, and there is communication with the IQ Gateway.
Flashing orange	The AC grid is normal, but there is no communication with the IQ Gateway.
Flashing red	The AC grid is either not present or not within the specification.
Solid red	There is an active **DC Resistance Low - Power Off** condition. To reset, see DC Resistance Low – Power Off condition on page 28. Refer to *IQ Gateway installation and operation manual* at https://enphase.com/installers/resources/documentation/communication. If the problem persists, measure the resistance between PV+ to EARTH and PV- to EARTH on the PV module and the inverter. Anything less than ~7 kΩ will trigger the **DC Resistance Low - Power Off** condition. Usually, the value is in MΩ on the inverter or PV module. Swap out the faulty PV module or microinverter.

The status LED on each microinverter lights green about six seconds after DC power is applied. It remains lit solid for two minutes, followed by six green flashes. After that, red blinks indicate that no grid is present if the system is not yet energized.

Any short red blinks after DC power is first applied to the microinverter indicate a failure during startup.

6.1.2 DC Resistance Low – Power Off condition

For all IQ8 Series Microinverters, a solid red status LED when DC power has been cycled indicates the microinverter has detected a **DC Resistance Low – Power Off** event. The LED will remain red, and the gateway will continue to report the fault until the error has been cleared.

An insulation resistance (IR) sensor in the microinverter measures the resistance between the positive and negative PV inputs to the ground. If either resistance drops below a threshold of 7 kΩ, the microinverter stops power production and raises this condition. This may indicate defective module insulation, wiring, or connectors, moisture ingress, or a similar problem. Although the cause may be temporary, this microinverter condition persists until the sensor is manually reset.

An IQ Gateway is required to clear this condition. The condition clears on operator command unless its cause is still present.

If a microinverter registers a DC Resistance Low - Power Off condition, you can attempt to clear it. If the condition does not clear after performing the procedure, contact https://enphase.com/contact/support.

© 2026 Enphase Energy Inc. All rights reserved.

Perform the following steps to send a clear message to the microinverter. Note that the condition will not clear after the sensor reset if the cause of the failure is still present. If the condition persists, contact your installer.

Method: Clear this error using the Enphase Installer Platform

- Log in to the Enphase Installer Platform and access the system.
- Click the **Events** tab. The next screen shows the system's current **DC Resistance Low - Power Off** condition.
- Click **DC Resistance Low - Power Off**.
- Click the serial number of the affected microinverter.
- Click **Tasks and Clear GFI** to clear the event.

6.1.3 Other faults

All other faults are reported to the gateway. For troubleshooting procedures, refer to the *IQ Gateway installation and operation manual* at https://enphase.com/installers/resources/documentation/communication.

6.2 Troubleshoot an inoperable microinverter

To troubleshoot an inoperable microinverter, perform the following steps.

WARNING: Risk of electric shock. Always de-energize the AC branch circuit before servicing. Never disconnect the DC or AC connectors under load.

WARNING: The Enphase microinverters are powered by DC power from the PV modules. Ensure you disconnect the DC connections, reconnect the DC power, and then watch for the solid green light for about six seconds after connecting to the DC power.

1. Ensure AC circuit breakers and disconnects are closed.
2. Check the connection to the grid and verify that the grid voltage is within allowable ranges.
3. Verify that AC line voltages at all PV circuit breakers at the electrical panel and subpanels are within the ranges shown in the following table.

240 VAC, single-phase	
L1 to L2	211 to 264 VAC
L1, L2 to ground	106 to 132 VAC
208 VAC, single-phase	
L1 to L2	183 to 229 VAC
L1, L2 to ground	106 to 132 VAC
220 VAC, single-phase[4]	
L1 to L2	198 to 264 VAC
L1, L2 to ground	106 to 132 VAC

[4] Only IQ8HC Microinverter supports 220 V Grid in Mexico.

© 2026 Enphase Energy Inc. All rights reserved.

4. Using an IQ Disconnect Tool, disconnect the AC cable for the microinverter in question from the IQ Cable.
5. Verify that utility power is present at the microinverter by measuring line-to-line and line-to-ground voltage at the IQ Cable connector.
6. Check that the AC branch circuit connections (IQ Cable and AC connections) are properly seated. Reset if necessary. Check for any damage, such as rodent damage.
7. Ensure any upstream AC disconnects and the dedicated circuit breakers for each AC branch circuit are functioning properly and are closed.
8. Disconnect and reconnect the DC PV module connectors. The status LED of each microinverter will light solid green for a few seconds after connection to DC power and then flash green six times to indicate normal startup operation about two minutes after connecting to DC power. The LED subsequently resumes normal operation if the grid is present. See LED operation on page 28.
9. Connect a clamp meter to one of the conductors of the DC cables from the PV module to measure the microinverter current. If the AC is disconnected, this will be under 1 A.
10. Verify that the PV module's DC voltage is within the allowable range shown in Specifications on page 34. To verify PV module electrical compatibility with the microinverter, refer to the Enphase compatibility calculator at https://enphase.com/installers/microinverters/calculator.
11. Swap DC leads with a known good, adjacent PV module. If, after checking the Enphase Installer Platform periodically (this may take up to 30 minutes), the problem moves to the adjacent module, which indicates that the PV module is not functioning correctly. If it stays in place, the problem is with the original microinverter. Contact https://enphase.com/contact/support for help reading the microinverter data and obtaining a replacement microinverter if needed.
12. Check the DC connections between the microinverter and the PV module. The connection may need to be tightened or reseated, or it may need to be replaced if it is worn or damaged.
13. Verify with your utility that the line frequency is within range.
14. If the problem persists, contact https://enphase.com/contact/support.

6.3 Disconnect a microinverter

If problems remain after following the troubleshooting steps, contact https://enphase.com/contact/support. If Enphase authorizes a replacement, perform the following steps. To ensure the microinverter is not disconnected from the PV modules under load, follow the disconnection steps in the order shown:

1. De-energize the AC branch circuit breaker.
2. IQ Cable AC connectors are tool-removable only. To disconnect the microinverter from the IQ Cable, insert the IQ Disconnect Tool and remove the connector.
3. Cover the PV module with an opaque cover.
4. Using a clamp meter, verify that no current flows in the DC wires between the PV module and the microinverter. If the current is still flowing, check that you have completed the preceding A, B, and C steps.

   NOTE: Take care when measuring DC. Most clamp meters must be zeroed first, as they drift with time.
5. Disconnect the PV module DC wire connectors from the microinverter using the IQ Disconnect Tool.
6. If present, loosen and/or remove any bonding hardware.
7. Remove the microinverter from the PV racking.

© 2026 Enphase Energy Inc. All rights reserved.

WARNING: There is a risk of electric shock and fire. Do not leave any connectors on the PV system disconnected for an extended period. If you do not plan to replace the microinverter immediately, you must cover any unused connector with an IQ Sealing Cap.

6.4 Install a replacement microinverter

1. Verify that the AC branch circuit breaker is de-energized when the replacement microinverter is available.
2. Mount the microinverter horizontally, bracketed side up, or vertically:
   - Always place the microinverter under the PV module, protected from direct exposure to rain, sun, and other harmful weather events. Allow a minimum of ¾ in (1.9 cm) between the roof and the microinverter. Also, allow ½ in (1.3 cm) between the back of the PV module and the top of the microinverter.
   - For a vertical mount, maintain a clearance of >12 in (30 cm) from the edges of the PV module to protect the microinverter from direct exposure to rain, UV, and other harmful weather events.

     WARNING: Risk of equipment damage. Mount the microinverter under the PV module.
   - Install the microinverter under the PV module to avoid direct exposure to rain, UV, and other harmful weather events.
   - Always install the microinverter bracket side up for horizontal mount installations.
   - Do not mount the microinverter upside down.
   - Do not expose the AC or DC connectors (on the IQ Cable connection, PV module, or microinverter) to rain or condensation before the connectors are mated.
3. Torque the mounting fasteners to the values shown. Do not over-torque.
   - ¼ in (6 mm) mounting hardware: 45 to 50 in-lb (5 N m).
   - 5/16 in (8 mm) mounting hardware: 80 to 85 in-lb (9 N m).
   - When using UL 2703 mounting hardware, use the manufacturer's recommended torque value.
4. If you are using bonding hardware, discard the old bonding hardware and use new bonding hardware when installing the replacement microinverter.
5. Connect the microinverter to the IQ Cable connector. Listen for a click as connectors engage.
6. Connect the DC leads of each PV module to the DC input connector of the microinverter.
7. Re-mount the PV module above the microinverter.
8. Energize the AC branch circuit breaker and verify the operation of the replacement microinverter by checking the status LED on the connector side of the microinverter.
9. Use the Enphase Installer App to retire the old microinverter serial number from the IQ Gateway database. In the Enphase Installer App, once connected to the IQ Gateway:
   a. Tap **Devices & Array** > **IQ Microinverters & Array** > **IQ Microinverter Serial Number**
   b. Tap **RETIRE** to retire the old microinverter serial number from the IQ Gateway database.
   c. Add the new microinverter serial number to the gateway database by scanning the barcode using the Enphase Installer App and your device camera.
   d. Tap **Devices & Array > IQ Microinverters & Array > ADD DEVICES**. Scan the IQ8 Series Microinverter's barcode and assign it to the array.

      OR

      Go to **Service** > **Request return and install Replacement** > **Install Replacement**. Enter the original device serial number and the replacement device serial number, and submit.
10. Start the provisioning process for the newly added microinverter using the Enphase Installer App and connect the Enphase Installer App to the IQ Gateway in the AP mode. You can then **Start Provisioning Devices** through the Enphase Installer App.

© 2026 Enphase Energy Inc. All rights reserved.

11. Ship the old microinverter to Enphase using the supplied return shipping label.

6.5 Enphase IQ Cable planning and ordering

The IQ Cable is a continuous length of 12 AWG, double-insulated, outdoor-rated cable with integrated connectors for microinverters. These connectors are preinstalled along the IQ Cable at intervals to accommodate varying PV module widths. The microinverters plug directly into the cable connectors.

The cabling is compatible with a variety of PV racking systems. For a list of approved PV racking systems, refer to the Compatible racking systems for microinverters tech brief.

6.5.1 Connector spacing options

An IQ Cable has three connector spacing options. The gap between connectors on the cable can be 50 inches (1.3 meters), 78 inches (2.0 meters), or 90 inches (2.3 meters). The 50 inches (1.3 meters) spacing is best suited for connecting PV modules installed in portrait orientation, while the 78 inches (2.0 meters) and 90 inches (2.3 meters) spacing are for landscape orientation.

6.5.2 IQ Cable options

Cable model	Connector spacing	PV module orientation	Connector count per box
Q-12-10-240	50 in (1.3 m)	Portrait	240
Q-12-17-240	78 in (2.0 m)	Landscape (60-cell)	240
Q-12-20-200	90 in (2.3 m)	Landscape (72-cell)	200

The cabling system is flexible enough to adapt to almost any solar design. To determine the cable type you need, apply the following considerations:

- You may need to transition between cable types when mixing PV modules in portrait and landscape orientation. See the preceding table for available cable types.
- To transition between cable types, install an IQ Field Wireable Connector pair.
- In situations where portrait modules are widely spaced, you may need to use landscape-spaced cables for the portrait-oriented PV modules and create loops of excess cable, if needed.

WARNING: Do not form loops smaller than 4.75 in (12 cm) in diameter.

6.6 Enphase IQ Cable accessories

The IQ Cable is available with several accessory options for ease of installation, including:

- IQ Field Wireable Connectors (male) (Q-CONN-10M): Make connections from any field wireable female connector.
- IQ Field Wireable Connectors (female) (Q-CONN-10F): Make connections from any IQ Cable open connector or IQ Field Wireable male connector.
- IQ Cable Clips (Q-CLIP-100): To fasten cabling to the racking or to secure looped cabling.

© 2026 Enphase Energy Inc. All rights reserved.

- IQ Disconnect Tool (Q-DISC-10): Disconnect tool for IQ Cable connectors, DC connectors, and AC module mount.
- IQ Cable Sealing Cap (female) (Q-SEAL-10): One is needed to cover each unused connector on the cabling.
- IQ Terminator (Q-TERM-10): One for each AC cable segment end; typically, two are needed per branch circuit.

7. Technical data

7.1 Technical considerations

⚠ **WARNING:** Risk of equipment damage. You must match the DC operating voltage range of the PV module with the allowable input voltage range of the Enphase microinverter.

⚠ **WARNING:** Risk of equipment damage. The maximum open-circuit voltage of the PV module must not exceed the specified maximum input voltage of the Enphase microinverter.

Be sure to apply the following when installing the Enphase IQ8 Series Microinverter system:

- PV modules must have conductors labeled **PV Wire** or **PV Cable** to comply with the NEC for ungrounded PV power systems.
- Verify that the voltage and current specifications of the PV module match those of the microinverter.
- The PV module's maximum short-circuit current rating must be equal to or less than the microinverter's maximum input DC short-circuit current rating.

The output voltage and current of the PV module depend on the PV cells' quantity, size, temperature, and the insolation of each cell. The highest PV module output voltage occurs when the cells' temperature is the lowest, and the PV module is in an open circuit (not operating).

7.2 Bifacial modules

Enphase IQ8 Series Microinverters are compatible with bifacial PV modules if the temperature-adjusted electrical parameters (maximum power, voltage, and current) of the modules, considering the electrical parameters, including the bifacial gain, are within the allowable microinverter input parameters range. In evaluating the amount of bifacial gain, follow the recommendations of the module manufacturers.

Bifacial solar modules produce power from both sides of the bifacial module, increasing total energy generation. The power gained from the rear side (bifacial gain) is highly influenced by various design factors such as albedo, module elevation, pitch, temperature, and shading. The bifacial gain can be anywhere between 0% and 30% of the module's nominal (front-side power rating). As various design considerations highly influence the bifacial gain, pairing the bifacial module with the right microinverter depends on the electrical characteristics of a given module.

© 2026 Enphase Energy Inc. All rights reserved.

8. Specifications

See the specifications in the following tables for:

- IQ8MC-72-M-US Microinverters
- IQ8AC-72-M-US Microinverters
- IQ8HC-72-M-US/IQ8HC-72-M-DOM-US Microinverters
- IQ8X-80-M-US/IQ8X-80-M-DOM-US Microinverters
- IQ Cable

8.1 IQ8MC-72-M-US Microinverter specifications

DC parameters		
Parameter	**Unit**	**Value**
Commonly used modules for pairing[5]	W	260–460
Module compatibility	—	To meet compatibility, PV modules must be within the maximum input DC voltage and maximum module I_{sc} listed below. Module compatibility can be checked at https://enphase.com/installers/microinverters/calculator.
MPPT voltage range	V	25–45
Operating range	V	18–58
Minimum/Maximum start voltage	V	22–58
Maximum input DC Voltage	V	60
Maximum continuous operating DC	A	14
Maximum input DC short-circuit current	A	25
Maximum module I_{sc}	A	20
Overvoltage class DC port	—	II
DC port backfeed under single fault	A	0
PV array configuration	—	It is an ungrounded array. No additional DC side protection is required; AC side protection requires a maximum of 20 A per branch circuit.

[5] No enforced DC/AC ratio.

© 2026 Enphase Energy Inc. All rights reserved.

AC parameters		
Parameter	**Unit**	**Value**
Peak output power	VA	330 @ 240 VAC 315 @ 208 VAC
Maximum continuous AC output power	VA	320 @ 240 VAC 310 @ 208 VAC
Nominal grid voltage (L-L)	V	Split-phase (L-L) 180° @ 240 VAC Single-phase (L-L), 120° @ 208 VAC[6]
Minimum/Maximum grid voltage [7]	V	211/264 @ 240 VAC 183/229 @ 208 VAC
Maximum continuous output current	A	1.33 @ 240 VAC 1.49 @ 208 VAC
Nominal frequency	Hz	60
Extended frequency range	Hz	47–68
AC short-circuit fault current over three cycles	A_{rms}	2.7
Maximum microinverters per 20 A AC branch circuit [8]	—	12 @ 240 VAC 10 @ 208 VAC
Total harmonic distortion	%	<5
Overvoltage class AC port	—	III
AC port backfeed current	mA	18
Power factor setting	—	1.0
Grid-tied power factor (adjustable)	—	0.85 leading ... 0.85 lagging
Peak efficiency	%	97.4 @ 240 VAC 97.2 @ 208 VAC
CEC weighted efficiency	%	97.0 @ 240 VAC 96.5 @ 208 VAC

[6] The IQ8MC Microinverter is not certified for use with Enphase Three Phase Network Protection Relay (NPR-3P-208-NA) and is designed for single-phase operation only. Check with the local utility requirements to install a single-phase inverter across three phases.
[7] The nominal voltage range can be extended beyond nominal if required by the utility.
[8] Limits may vary. Refer to local requirements to define the number of microinverters per branch in your area.

© 2026 Enphase Energy Inc. All rights reserved.

AC parameters		
Parameter	**Unit**	**Value**
Nighttime power consumption	mW	33 @ 240 VAC 25 @ 208 VAC
Reactive current (A_{rms}) at no power	mA	90 @ 240 VAC 77 @ 208 VAC

Features and specifications	
Ambient temperature range	–40°F to 149°F (–40°C to 65°C)
Relative humidity range	4% to 100% (condensing)
DC connector type	Stäubli MC4
Dimensions (W × H × D)	6.9" × 8.3" × 1.2" (175 mm × 212 mm × 30.2 mm)
Weight	2.42 lb (1.1 kg)
Cooling	Natural convection - no fans
Approved for wet locations	Yes
Pollution degree	PD3
Enclosure	Class II double-insulated, corrosion-resistant polymeric enclosure

Compliance	
Compliance	CA Rule 21 (UL 1741-SA), UL 62109-1, UL 62109-2, IEEE 1547:2018 (UL 1741-SB), FCC Part 15 Class B, ICES-0003 Class B, CAN/CSA-C22.2 NO. 107.1-01, 330, CAN/CSA-C22.3 NO. 9 This product is UL Listed as PV Rapid Shutdown Equipment and conforms with NEC 2014, NEC 2017, NEC 2020, and NEC 2023 section 690.12 and C22.1-2018 Rule 64-218 Rapid Shutdown of PV systems for AC and DC conductors when installed according to the manufacturer's instructions.

8.2 IQ8AC-72-M-US Microinverter specifications

DC parameters		
Parameter	**Unit**	**Value**
Commonly used modules for pairing[9]	W	295–500

[9] No enforced DC/AC ratio.

© 2026 Enphase Energy Inc. All rights reserved.

DC parameters		
Parameter	**Unit**	**Value**
Module compatibility	—	To meet compatibility, PV modules must be within the maximum input DC voltage and maximum module I_{sc} listed below. Module compatibility can be checked at https://enphase.com/installers/microinverters/calculator.
MPPT voltage range	V	28–45
Operating range	V	18–58
Minimum/Maximum start voltage	V	22–58
Maximum input DC Voltage	V	60
Maximum continuous operating DC	A	14
Maximum input DC short-circuit current	A	25
Maximum module I_{sc}	A	20
Overvoltage class DC port	—	—
DC port backfeed under single fault	A	0
PV array configuration	It is an ungrounded array. No additional DC side protection is required; AC side protection requires a maximum of 20 A per branch circuit.	

AC parameters		
Parameter	**Unit**	**Value**
Peak output power	VA	366 @ 240 VAC 350 @ 208 VAC
Maximum continuous AC output power	VA	349 @ 240 VAC 345 @ 208 VAC
Nominal grid voltage (L-L)	V	Split-phase (L-L), 180° @ 240 VAC Single-phase (L-L), 120° @ 208 VAC[10]
Minimum/Maximum grid voltage [11]	V	211/264 @ 240 VAC 183/229 @ 208 VAC

[10] The IQ8AC Microinverter is not certified for use with Enphase Three Phase Network Protection Relay (NPR-3P-208-NA) and is designed for single-phase operation only. Check with the local utility requirements to install a single-phase inverter across three phases.

[11] The nominal voltage range can be extended beyond nominal if required by the utility.

© 2026 Enphase Energy Inc. All rights reserved.

AC parameters		
Parameter	**Unit**	**Value**
Maximum continuous output current	A	1.45 @ 240 VAC 1.66 @ 208 VAC
Nominal frequency	Hz	60
Extended frequency range	Hz	47
AC short-circuit fault current over three cycles	A_{rms}	2.70
Maximum microinverters per 20 A AC branch circuit[12]	—	11 @ 240 VAC 9 @ 208 VAC
Total harmonic distortion	%	<5
Overvoltage class AC port	—	III
AC port backfeed current	mA	18
Power factor setting	—	1.0
Grid-tied power factor (adjustable)	—	0.85 leading ... 0.85 lagging
Peak efficiency	%	97.3 @ 240 VAC 97.2 @ 208 VAC
CEC weighted efficiency	%	97.0 @ 240 VAC 96.5 @ 208 VAC
Nighttime power consumption	mW	30 @ 240 VAC 22 @ 208 VAC
Reactive current (A_{rms}) at no power	mA	90 @ 240 VAC 77 @ 208 VAC

Features and specifications	
Ambient temperature range	–40°F to 149°F (–40°C to 65°C)
Relative humidity range	4% to 100% (condensing)
DC connector type	Stäubli MC4
Dimensions (W × H × D)	6.9" × 8.3" × 1.2" (175 mm × 212 mm × 30.2 mm)
Weight	2.42 lb (1.1 kg)

[12] Limits may vary. Refer to local requirements to define the number of microinverters per branch in your area.

© 2026 Enphase Energy Inc. All rights reserved.

Features and specifications	
Cooling	Natural convection - no fans
Approved for wet locations	Yes
Pollution degree	PD3
Enclosure	Class II double-insulated, corrosion-resistant polymeric enclosure
Compliance	
Compliance	CA Rule 21 (UL 1741-SA), UL 62109-1, UL 62109-2, IEEE 1547:2018 (UL 1741-SB), FCC Part 15 Class B, ICES-0003 Class B, CAN/CSA-C22.2 NO. 107.1-01, 330, CAN/CSA-C22.3 NO. 9 This product is UL Listed as PV Rapid Shutdown equipment and conforms with NEC 2014, NEC 2017, NEC 2020, and NEC 2023 section 690.12 and C22.1-2018 Rule 64-218 Rapid Shutdown of PV systems for AC and DC conductors when installed according to the manufacturer's instructions.

8.3 IQ8HC-72-M-US/IQ8HC-72-M-DOM-US Microinverter specifications

DC parameters		
Parameter	**Unit**	**Value**
Commonly used modules for pairing[13]	W	295–540
Module compatibility	—	To meet compatibility, PV modules must be within the following maximum input DC voltage and maximum module I_{sc}. Module compatibility can be checked at https://enphase.com/installers/microinverters/calculator.
MPPT voltage range	V	29.5–45
Operating Range	V	18–58
Minimum/Maximum start voltage	V	22–58
Maximum Input DC Voltage	V	60
Maximum continuous operating DC	A	14
Maximum input DC short-circuit current	A	25
Maximum module I_{sc}	A	20
Overvoltage class DC port	—	II

[13] No enforced DC/AC ratio.

© 2026 Enphase Energy Inc. All rights reserved.

DC parameters		
Parameter	**Unit**	**Value**
DC port backfeed under single fault	A	—
PV array configuration	—	Ungrounded array. No additional DC side protection is required; AC side protection requires a maximum of 20 A per branch circuit.

AC parameters		
Parameter	**Unit**	**Value**
Peak output power	VA	384 @ 240 VAC 366 @ 208 VAC
Maximum continuous AC output power	VA	384[14] @ 240 VAC 360 @ 208 VAC
Nominal grid voltage (L-L)	V	Split-phase (L-L), 180° @ 240 VAC Single-phase (L-L), 120° @ 208 VAC[15]
Minimum/Maximum grid voltage[16]	V	211/264 @ 240 VAC 183/229 @ 208 VAC
Maximum continuous output current	A	1.60 @ 240 VAC 1.73 @ 208 VAC
Nominal frequency	Hz	60
Extended frequency range	Hz	47–68
AC short-circuit fault current over three cycles	A_{rms}	2.70
Maximum microinverters per 20 A AC branch circuit[17]	—	10 @ 240 VAC 9 @ 208 VAC
Total harmonic distortion	%	<5
Overvoltage class AC port	—	III
AC port backfeed current	mA	18

14 Microinverter labels may indicate either 380 VA or 384 VA depending on the production date. However, all units are certified for a maximum continuous output power of 384 VA.
15 The IQ8HC Microinverter is not certified for use with Enphase Three Phase Network Protection Relay (NPR-3P-208-NA) and is designed for single-phase operation only. Check with the local utility requirements to install a single-phase inverter across three phases.
16 The nominal voltage range can be extended beyond nominal if required by the utility.
17 Limits may vary. Refer to local requirements to define the number of microinverters per branch in your area.

© 2026 Enphase Energy Inc. All rights reserved.

AC parameters		
Parameter	**Unit**	**Value**
Power factor setting	—	1.0
Grid-tied power factor (adjustable)	—	0.85 leading ... 0.85 lagging
Peak efficiency	%	97.3 @ 240 VAC 97.2 @ 208 VAC
CEC weighted efficiency	%	97.0 @ 240 VAC 96.5 @ 208 VAC
Nighttime power consumption	mW	22 @ 240 VAC 26 @ 208 VAC
Reactive current (Arms) at no power	mA	90 @ 240 VAC 77 @ 208 VAC

Features and specifications	
Ambient temperature range	–40°F to 149°F (–40°C to 65°C)
Relative humidity range	4% to 100% (condensing)
DC connector type	Stäubli MC4
Dimensions (W × H × D)	6.9" × 8.3" × 1.2" (175 mm × 212 mm × 30.2 mm)
Weight	2.42 lb (1.1 kg)
Cooling	Natural convection - no fans
Approved for wet locations	Yes
Pollution degree	PD3
Enclosure	Class II double-insulated, corrosion-resistant polymeric enclosure

Compliance	
Compliance	CA Rule 21 (UL 1741-SA), UL 62109-1, UL 62109-2, IEEE 1547:2018 (UL 1741-SB), FCC Part 15 Class B, ICES-0003 Class B, CAN/CSA-C22.2 NO. 107.1-01, 330, CAN/CSA-C22.3 NO. 9 This product is UL Listed as PV Rapid Shutdown equipment and conforms with NEC 2014, NEC 2017, NEC 2020, and NEC 2023 section 690.12 and C22.1-2018 Rule 64-218 Rapid Shutdown of PV systems for AC and DC conductors when installed according to the manufacturer's instructions.

© 2026 Enphase Energy Inc. All rights reserved.

8.4 IQ8X-80-M-US/IQ8X-80-M-DOM-US Microinverter specifications

DC Parameters		
Parameter	**Unit**	**Value**
Commonly used modules for pairing[18]	W	320–540
Module compatibility	—	To meet compatibility, PV modules must be within the following maximum input DC voltage and maximum module I_{sc}. Module compatibility can be checked at https://enphase.com/installers/microinverters/calculator.
MPPT voltage range	V	43–60
Operating range	V	25–79.5
Minimum/Maximum start voltage	V	30/79.5
Maximum input DC voltage	V	79.5
Maximum continuous operating DC	A	10
Maximum input DC short-circuit current	A	16
Maximum module I_{sc}	A	13
Overvoltage class DC port	—	II
DC port backfeed under single fault	A	0
PV array configuration	—	It is an ungrounded array. No additional DC side protection is required; AC side protection requires a maximum of 20 A per branch circuit.

AC parameters		
Parameter	**Unit**	**Value**
Peak output power	VA	384 @ 240 VAC 366 @ 208 VAC
Maximum continuous AC output power	VA	384[19] @ 240 VAC 360 @ 208 VAC
Nominal grid voltage (L-L)	V	Split-phase (L-L), 180° @ 240 VAC Single-phase (L-L), 120° @ 208 VAC[20]

[18] No enforced DC/AC ratio.
[19] Microinverter labels may indicate either 380 VA or 384 VA depending on the production date. However, all units are certified for a maximum continuous output power of 384 VA.

© 2026 Enphase Energy Inc. All rights reserved.

AC parameters		
Parameter	**Unit**	**Value**
Minimum/Maximum grid voltage[21]	V	211/264 @ 240 VAC 183/229 @ 208 VAC
Maximum continuous output current	A	1.60 @ 240 VAC 1.73 @ 208 VAC
Nominal frequency	Hz	60
Extended frequency range	Hz	47–68
AC short-circuit fault current over three cycles	A_{rms}	2.70
Maximum microinverters per 20 A AC branch circuit[22]	—	10 @ 240 VAC 9 @ 208 VAC
Total harmonic distortion	%	<5
Overvoltage class AC port	—	III
AC port backfeed current	mA	18
Power factor setting	—	1.0
Grid-tied power factor (adjustable)	—	0.85 leading ... 0.85 lagging
Peak efficiency	%	97.3 @ 240 VAC 97.0 @ 208 VAC
CEC weighted efficiency	%	96.5 @ 240 VAC 96.5 @ 208 VAC
Nighttime power consumption	mW	26 @ 240 VAC 12 @ 208 VAC
Reactive current (A_{rms}) at no power	mA	90 @ 240 VAC 77 @ 208 VAC

Features and specifications	
Ambient temperature range	–40°F to 149°F (–40°C to 65°C)

[20] The IQ8X Microinverter is not certified for use with Enphase Three Phase Network Protection Relay (NPR-3P-208-NA) and is designed for single-phase operation only. Check with the local utility requirements to install a single-phase inverter across three phases.
[21] The nominal voltage range can be extended beyond nominal if required by the utility.
[22] Limits may vary. Refer to local requirements to define the number of microinverters per branch in your area.

© 2026 Enphase Energy Inc. All rights reserved.

Features and specifications	
Relative humidity range	4% to 100% (condensing)
DC connector type	Stäubli MC4
Dimensions (W × H × D)	6.9" × 8.3" × 1.2" (175 mm × 212 mm × 30.2 mm)
Weight	2.42 lb (1.1 kg)
Cooling	Natural convection - no fans
Approved for wet locations	Yes
Pollution degree	PD3
Enclosure	Class II double-insulated, corrosion-resistant polymeric enclosure
Compliance	
Compliance	CA Rule 21 (UL 1741-SA), UL 62109-1, UL 62109-2, IEEE 1547:2018 (UL 1741-SB), FCC Part 15 Class B, ICES-0003 Class B, CAN/CSA-C22.2 NO. 107.1-01, 330, CAN/CSA-C22.3 NO. 9 This product is UL Listed as PV Rapid Shutdown equipment and conforms with NEC 2014, NEC 2017, NEC 2020, and NEC 2023 section 690.12 and C22.1-2018 Rule 64-218 Rapid Shutdown of PV Systems for AC and DC conductors when installed according to the manufacturer's instructions.

8.5 IQ Cable specifications

Specification	Value
Voltage rating	600 V
Voltage withstand test (kV/1 minute)	AC 3.0
Max DC conductor resistance (68°F) (Ω/km)	5.433
Insulation resistance (68°F)	≥20 M (Ω/Km)
System temperature range (ambient)	–40°F to 149°F (–40°C to 65°C)
Cable temperature rating	194°F (90°C) Dry/194°F (90°C) Wet
Cable rating	DG
Certification	UL 3003, TC-ER equivalent
Flame test rating	FT4
Cable conductor insulator rating	THHN/THWN-2
Environmental protection rating	IEC 60529, IP67, NEMA 6
UV resistance	720 h

© 2026 Enphase Energy Inc. All rights reserved.

Specification	Value
Compliance	RoHS, OIL RES I, CE, UV Resistant, combined UL for Canada and the United States of America
Conductor size	12 AWG
Maximum loop size	4.75" (12 cm)
Flat cable dimensions	0.2" × 0.37" (6 mm × 9.5 mm)
Sealing cap dimensions	1.5" × 0.7" (38.6 mm × 20 mm)
Cable connector dimensions	0.7" × 0.04" × 0.25" (20 mm × 1.1 mm × 6.5 mm)

8.6 Enphase connector ratings

The following table lists the Enphase connectors on the cable assemblies that have a maximum current of 20 A, a maximum OCPD of 20 A, a maximum ambient temperature of –40°F to 174.2°F (–40°C to 79°C), and are rated for disconnection under load.

Part number	Model	Maximum voltage
840-00387	Q-12-10-240	277 VAC
840-00388	Q-12-17-240	277 VAC
840-00389	Q-12-20-200	277 VAC

© 2026 Enphase Energy Inc. All rights reserved.

8.7 Enphase installation map

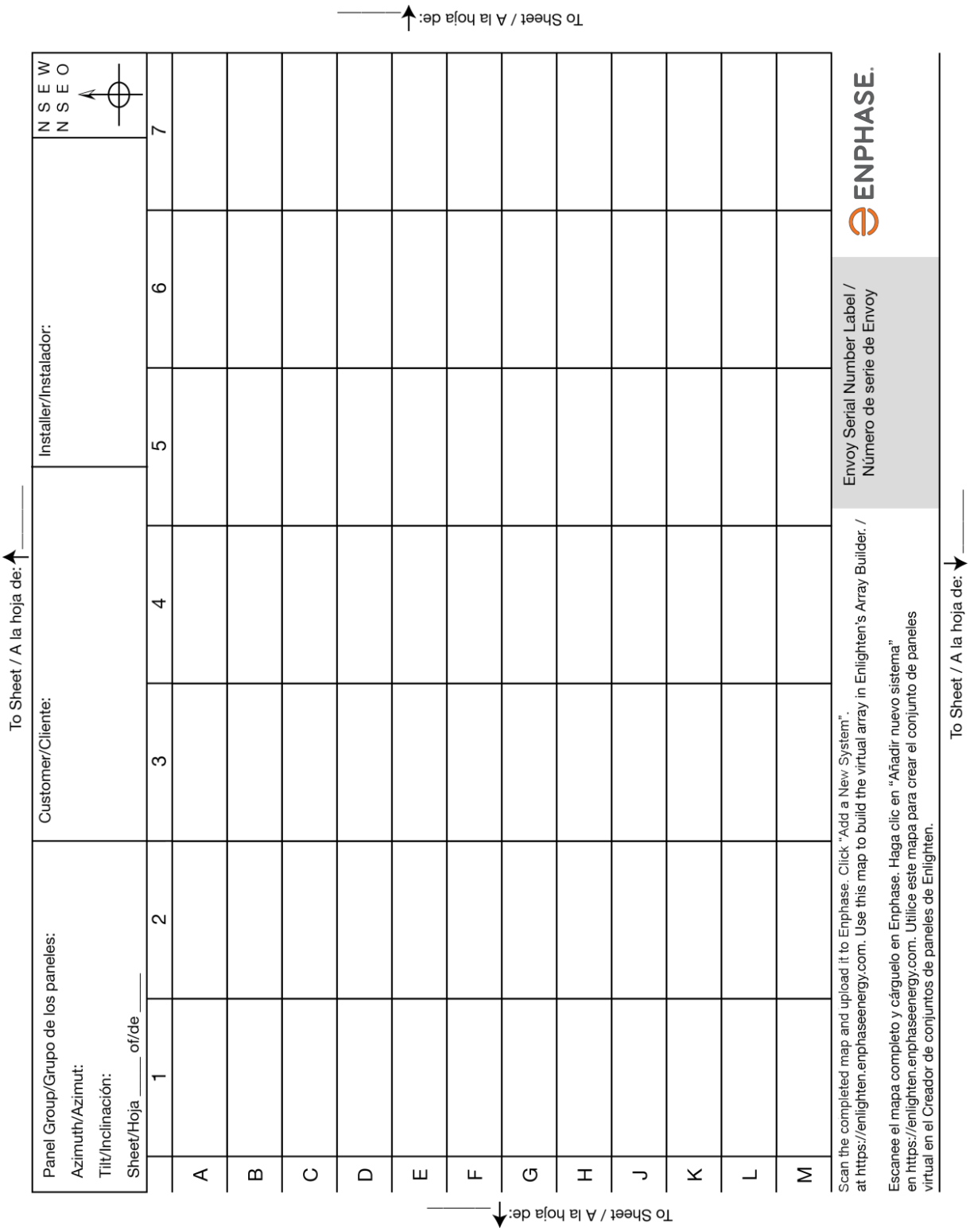

© 2026 Enphase Energy Inc. All rights reserved.

8.8 Sample wiring diagram (grid-tied system)

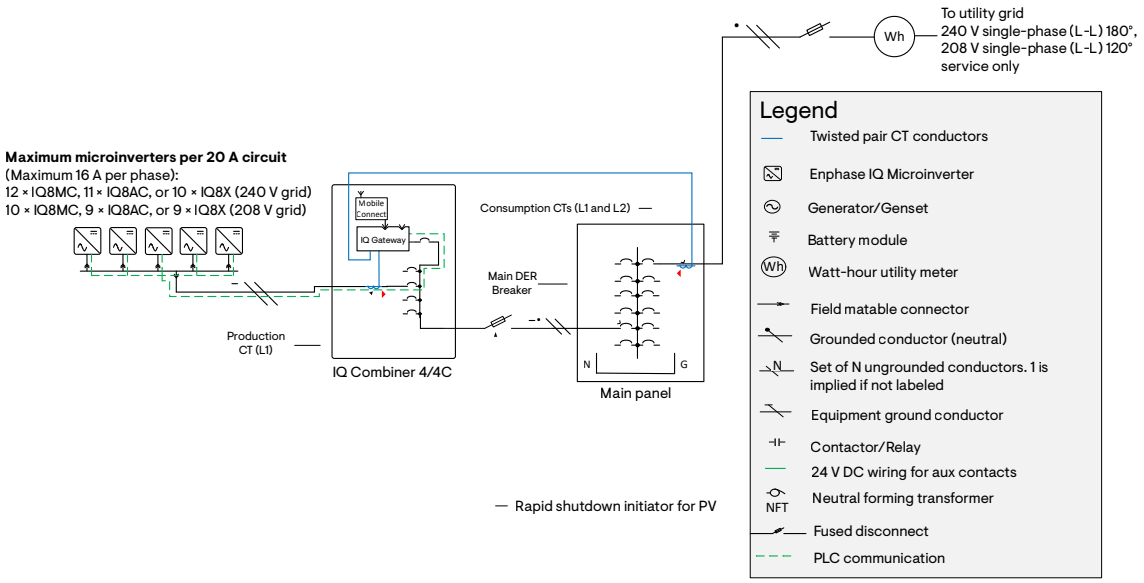

9. Revision history

Revision	Date	Description
IOM-00108-7.0	September 2026	• Added compliance certifications for Canada. • Added a footnote regarding the labels indicating maximum continuous AC output power in the following microinverters: IQ8HC-72-M-US/IQ8HC-72-M-DOM-US and IQ8X-80-M-US/IQ8X-80-M-DOM-US.
IOM-00108-6.0	May 2026	Editorial update.
IOM-00108-5.0	February 2026	
IOM-00108-4.0	September 2025	Corrected the “Audience” section.
IOM-00108-3.0	September 2025	Updated information on backward compatibility with IQ8/IQ7 Series Microinverters.
IOM-00108-2.0	December 2024	Updated information on backward compatibility with IQ7 Series Microinverters.
IOM-00108-1.0	September 2024	Updated the “Planning for microinverter installation” and “Specifications” sections.

Previous releases.

© 2026 Enphase Energy Inc. All rights reserved.