ENPHASE

IQ Combiner 5/5C

Quick install guide



MODEL:
X-IQ-AM1-240-5
X-IQ-AM1-240-5C
X-IQ-AM1-240-5-HDK
X-IQ-AM1-240-5C-HDK

VERSION 12.0
APRIL 2026

140-00254-12

The IQ Combiner 5/5C consolidates interconnection equipment into a single enclosure and streamlines IQ Series Microinverters and IQ Gateway installation by providing a consistent, pre-wired solution for residential applications. IQ Combiner 5/5C uses wired communication and is compatible with IQ System Controller 3/3G and IQ Battery 5P.

NOTE: In LAC markets, including Bermuda, the Cayman Islands, Costa Rica, Panama, The Bahamas, and the Turks and Caicos Islands, the IQ Combiner 5 is available.

Compatibility: The IQ Combiner 5/5C is compatible with IQ6/IQ7 or IQ8 Microinverters, IQ Battery 5P, and IQ System Controller 3/3G. It requires a COMMS-KIT-01 for compatibility with IQ Battery 3/10/3T/10T and IQ System Controller 1/2. It is not compatible with M Series Microinverters.

NOTE: IQ Combiner 5/5C can be used for grid-interactive (that is, grid-tied) as well as multi-mode (that is, grid-forming) installations.

SMART	EASY TO INSTALL	RELIABLE
Includes IQ Gateway for communication and control	Mounts to one stud with centered brackets	Durable NRTL-certified NEMA type 3R enclosure
Includes Enphase Mobile Connect (CELLMODEM-M1-06-SP-05/ CELLMODEM-07-NA-05*), only with IQ Combiner 5C	Supports bottom, back, and side conduit entries	Five-year limited warranty
Supports flexible networking: Wi-Fi, Ethernet, or cellular	Supports up to four 2-pole branch circuits for 240 VAC plug-in breakers (not included)	Two-year labor reimbursement program coverage is included for both the IQ Combiner SKUs
Provides production metering (revenue grade), consumption metering, and IQ Battery 5P metering.	80 A total PV branch circuits	UL 1741 Listed

* IQ Combiner 5C will be equipped with CELLMODEM-07-NA-05 from Q1 2025

WARNING: Risk of equipment damage. Instructions for wiring grid-forming systems are different from those for grid-tied systems. Follow specific wiring instructions as outlined herein to maintain the warranty.

IQ Combiner 5/5C-EN-LAC

IQ Combiner 5/5C-ES-LAC



Table of contents

System configurations

Scenario 1: Solar Only

Scenario 2: Solar + Battery without backup

Scenario 3: Solar + Battery with backup

Scenario 4: Sunlight Backup

What's in the box

Tools/additional items required

DER Breakers

Installation preparation checklist

Section A
Mounting the product

Plan a location for the IQ Combiner 5/5C

Step 1: Minimum clearance

Step 2: Detaching the door

Step 3: Removing the dead front

Step 4: Mounting the IQ Combiner 5/5C

Section B
Mounting the breakers

Internal view of
IQ Combiner 5/5C

Install DER Breakers

Section C
Wiring

Drill conduits

Wire size and torque table

Wire the input from PV

Wire the input from the IQ Batteries

Wire the IQ Gateway

Wire the output connections

Wiring the control (CTRL) cable to headers

Control (CTRL) wiring between system components

Section D
Installing the current transformers

Consumption CT installation in
grid-tied systems (load with solar configuration)

Consumption CT installation
in grid-tied systems (load-only configuration)

Consumption CT installation in grid-forming systems

IQ Battery 5P metering for
grid-tied systems

IQ Battery 5P metering for grid-forming systems

Table of contents

Section E
Close and energize the IQ Combiner

Closing the IQ Combiner

Energizing the IQ Combiner

Section F
Operation

Site commissioning

IQ Gateway LED information

IQ Gateway push buttons

Setting up Enphase Power Control (EPC)

Setting up Enphase Power Control on-site during commissioning

Mobile Connect

Troubleshooting

Safety (all models)

Revision history

System configurations

Based on the user requirement, the IQ Combiner can be installed in multiple site configurations. These can be classified into four scenarios:

1. Solar Only
2. Solar + Battery without backup
3. Solar + Battery with backup
4. Sunlight Backup

Scenario 1: Solar Only

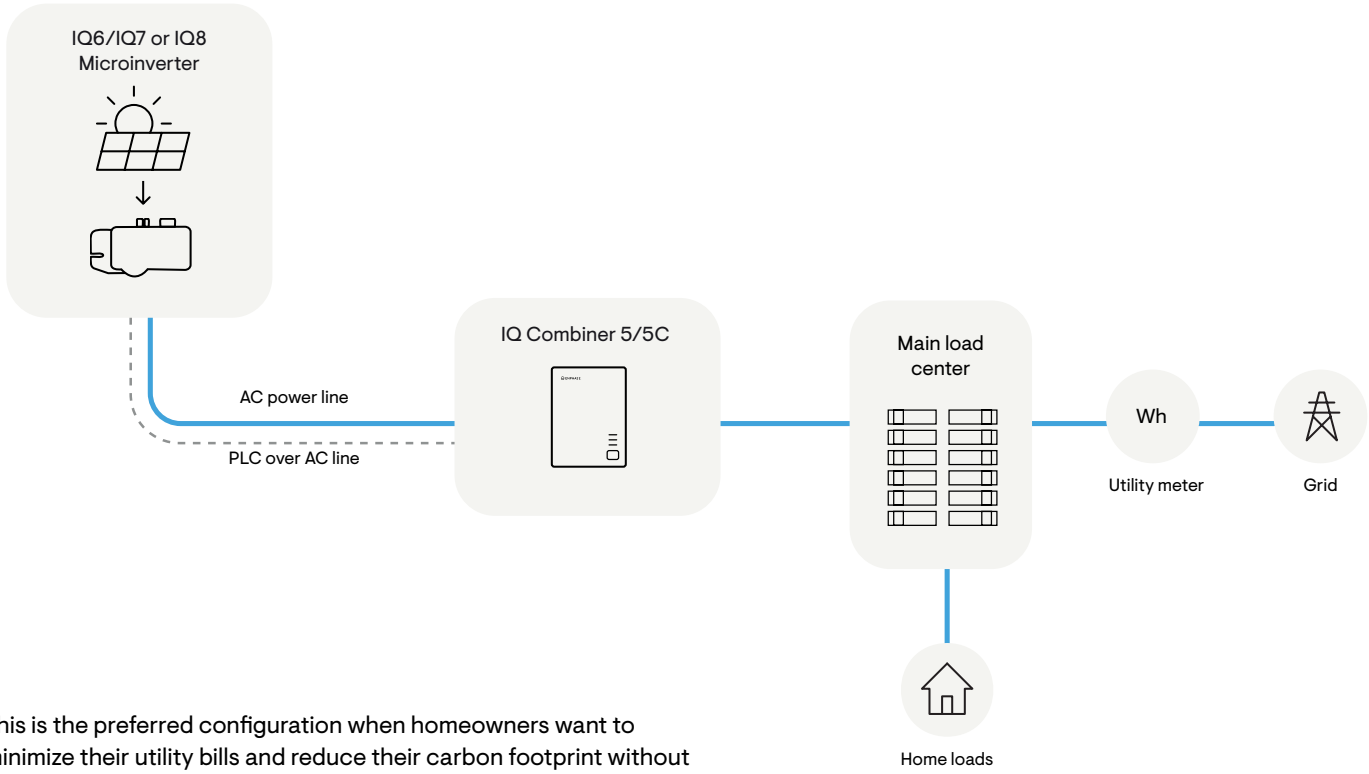

This is the preferred configuration when homeowners want to minimize their utility bills and reduce their carbon footprint without requiring backup. Due to the Enphase system's modular design, homeowners have the option to start with this configuration and upgrade to storage later.
The microinverter ranges supported in this configuration are IQ6, IQ7, and IQ8.

NOTE: IQ6 and IQ7 cannot be used in the same PV array with IQ8 Series Microinverters.

Scenario 2:
Solar + Battery without backup

IQ Battery 5P connected to IQ Combiner 5/5C

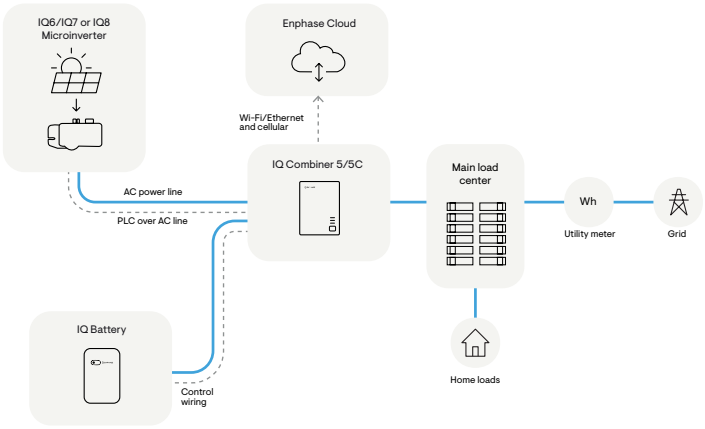

IQ Battery 5P connected to the main load center

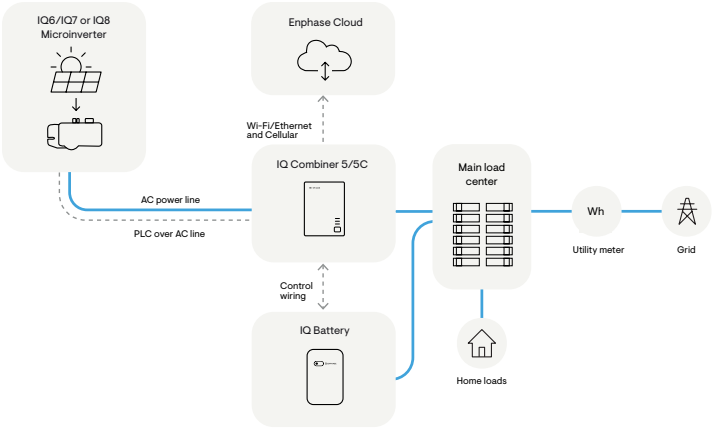

This is the preferred configuration when homeowners want to minimize their utility bills, reduce their carbon footprint, and have the option to save the excess power generated by their solar system for consumption during non-sunlight hours. A site can store the energy the solar system makes and use it anytime, day or night, rain or shine.

The microinverter ranges supported in this configuration are IQ6/IQ7 or IQ8. The battery supported in this configuration is the IQ Battery 5P. The IQ Combiner 5/5C supports a total of 80 A of solar and battery circuits. Based on the total system size (solar+IQ Battery 5P) being installed, homeowners have the option of installing the IQ Battery 5P either on the IQ Combiner 5/5C or on the main load center. If the total system size is less than 80 A, it is recommended to install the IQ Battery 5P (along with the solar) on the IQ Combiner 5/5C.

Scenario 3:
Solar + Battery with backup

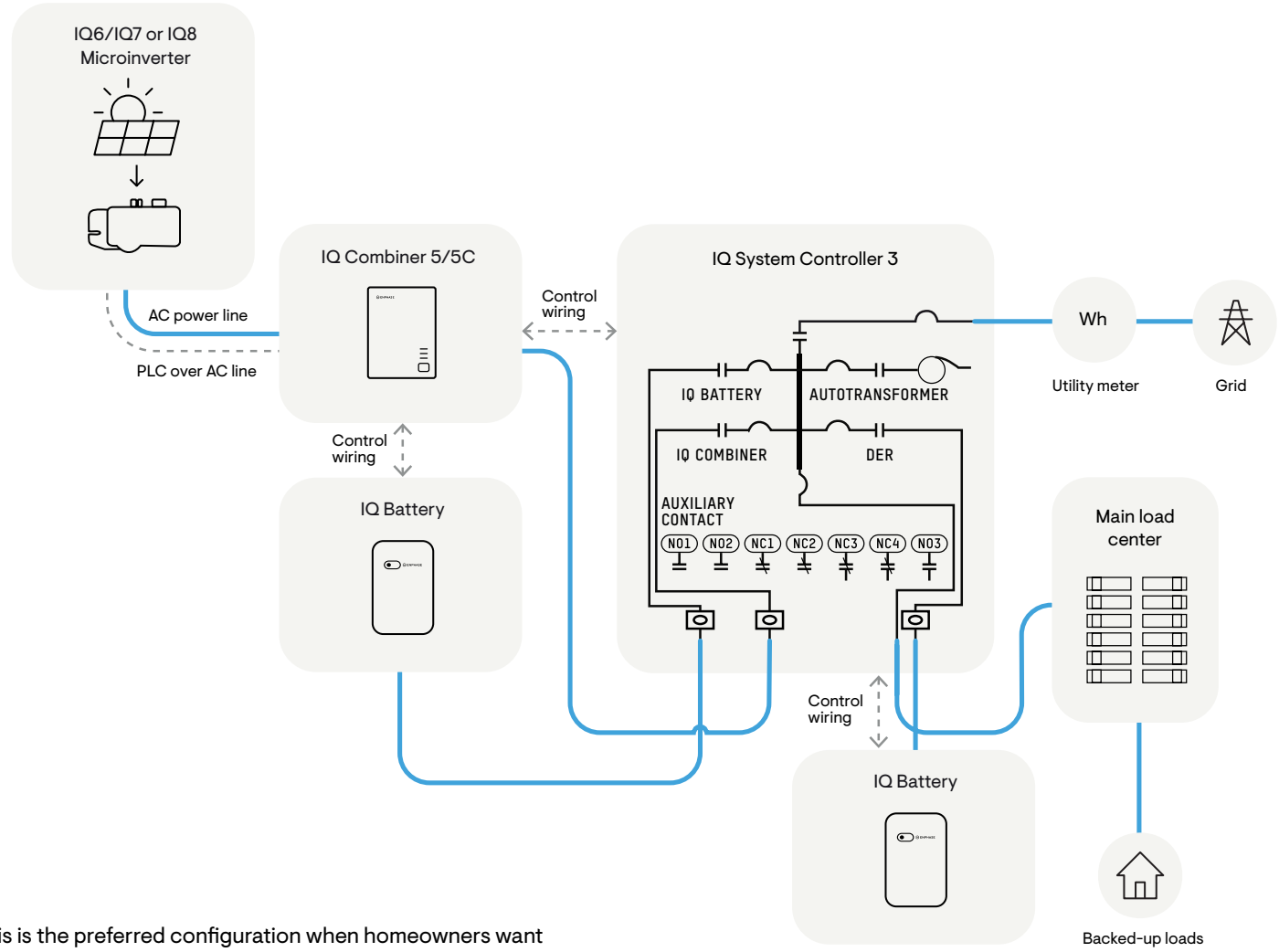

This is the preferred configuration when homeowners want complete energy independence. This is the most powerful configuration available that ensures a home can remain powered even if the utility grid shuts down. Depending on the size of the solar and battery installed, the home can withstand grid outages for days at a stretch.

The microinverter ranges supported in this configuration are IQ6/IQ7 or IQ8. The battery supported in this configuration is the IQ Battery 5P. The IQ System Controller 3/3G is required to be installed on-site to provide the grid-forming capability.

The IQ Combiner 5/5C is to be connected to the PV breaker on the IQ System Controller 3/3G. In this scenario, the IQ Battery 5P's are to be connected directly to the IQ System Controller and not to the IQ Combiner 5/5C. Follow the instructions in the http://enphase.com/download/iq-system-controller-3-quick-install-guide for more instructions on the installation of this configuration.

Scenario 4: Sunlight Backup

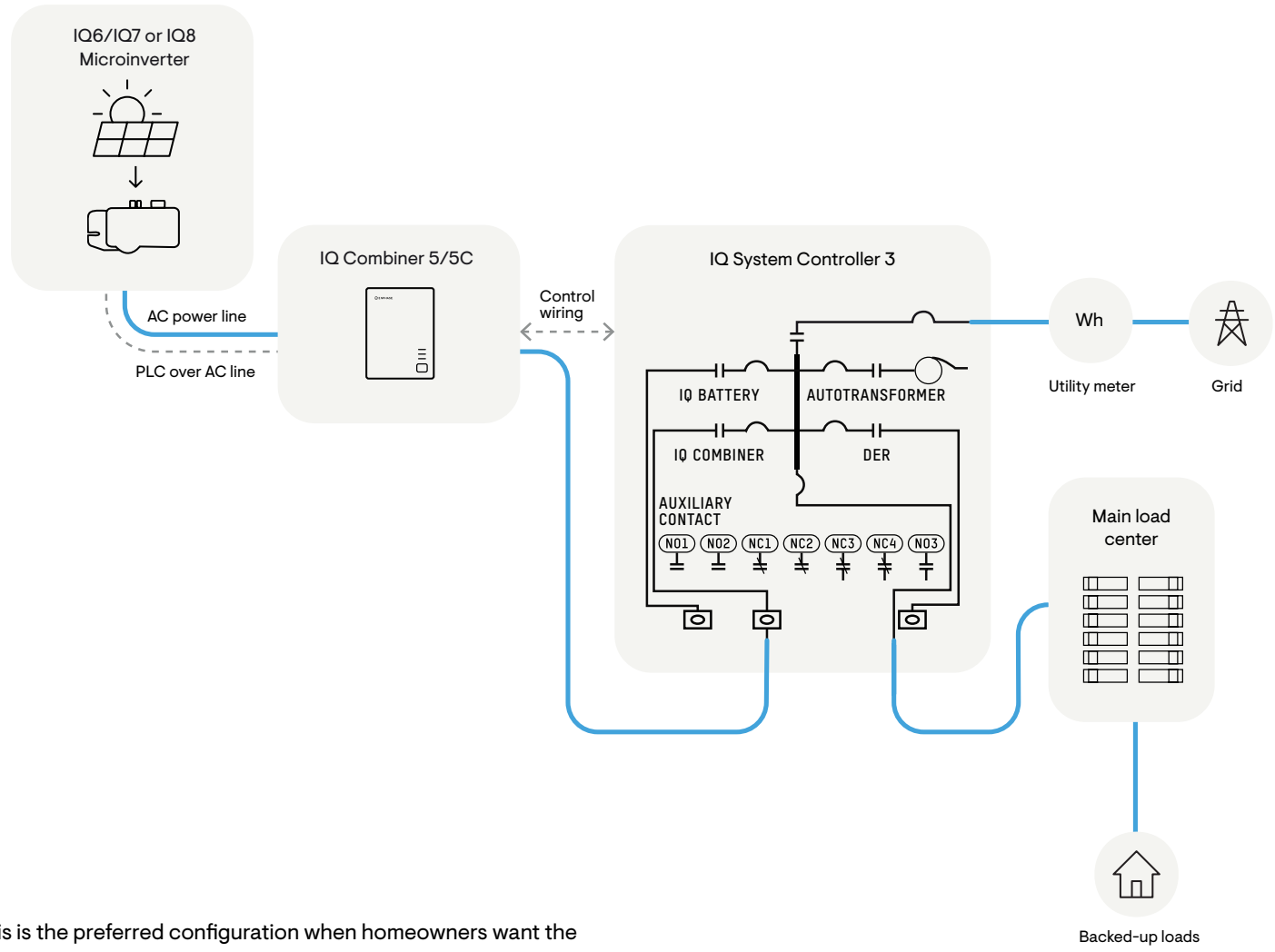

This is the preferred configuration when homeowners want the home to remain powered even if the utility grid shuts down during sunlight hours.

The microinverter ranges supported in this configuration are IQ6/IQ7 or IQ8. The battery supported in this configuration is the IQ Battery 5P. The IQ System Controller 3/3G is required to be installed on-site to provide the grid-forming capability.

The IQ Combiner 5/5C is to be connected to the PV breaker on the IQ System Controller 3/3G. In this scenario, the IQ Battery 5P's are to be connected directly to the IQ System Controller and not to the IQ Combiner 5/5C. Follow the instructions in the http://enphase.com/download/iq-system-controller-3-quick-install-guide for more instructions on the installation of this configuration.

What’s in the box

IQ Combiner 5/5C

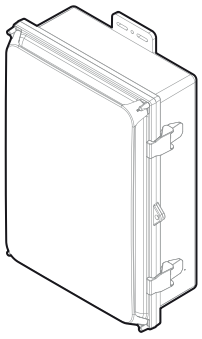

IQ Battery metering CT and Consumption metering CTs

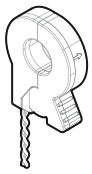

Enphase Mobile Connect*

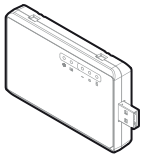

Quick install guide



DESCRIPTION	MODEL NUMBER	QUANTITY
IQ Combiner 5/5C	X-IQ-AM1-240-5 or X-IQ-AM1-240-5C or X-IQ-AM1-240-5-HDK or X-IQ-AM1-240-5C-HDK	1
Enphase Mobile Connect*	CELLMODEM-M1-06-SP-05	1
IQ Battery metering CT	CT-200-CLAMP	1
Consumption metering CT	CT-200-CLAMP	2
Quick install guide, labels for EPC, and spare control headers		1

* Only included in X-IQ-AM1-240-5C and X-IQ-AM1-240-5C-HDK (IQ Combiner 5C & IQ Combiner 5C with hold-down kit)

Tools/additional items required

S. NO	ITEM NAME	DESCRIPTION	QUANTITY	SOURCE	SCENARIO 1: SOLAR ONLY	SCENARIO 2: SOLAR + BATTERY WITHOUT BACKUP	SCENARIO 3: SOLAR + BATTERY WITH BACKUP	SCENARIO 4: SUNLIGHT BACKUP
1	Control cable (CTRL-SC3-NA-01)	For Control communication between Enphase products	Per site requirement	Provided by Enphase	No	Yes	Yes	Yes
2	Copper conductors	To connect IQ Combiner main lugs to the breaker in the load center or IQ System Controller	Per site requirement	Retail outlets	Yes	Yes	Yes	Yes
3	DER breakers	20 A breaker for PV branch circuits (or) 20 A/40 A/60 A breaker for IQ Battery	Based on PV and IQ Battery system size	Enphase SKU (separately orderable) or retail outlets	Yes	Yes	Yes	Yes
4	Breaker in the load center/ IQ System Controller	Appropriately size breaker for installing IQ Combiner in main load center or IQ System Controller	1	Provided by Enphase/ Retail outlets	No	Yes	Yes	Yes
5	Screwdriver	To insert, remove & tighten screws	1	Retail outlets	Yes	Yes	Yes	Yes
6	Pliers	To twist and cut wires	1	Retail outlets	Yes	Yes	Yes	Yes
7	Torque wrench	To control and apply a specific torque to a fastener	1	Retail outlets	Yes	Yes	Yes	Yes
8	#8 screws	For mounting IQ Combiner on the wall	2	Retail outlets	Yes	Yes	Yes	Yes
9	Rain-tight conduit hubs	For wire entry/exit from the IQ Combiner	Per site requirement	Retail outlets	Yes	Yes	Yes	Yes
10	Step drill	To drill conduit in the IQ Combiner	Per site requirement	Retail outlets	Yes	Yes	Yes	Yes

DER Breakers

X-IQ-AM1-240-5-HDK or X-IQ-AM1-240-5C-HDK (IQ Combiner 5/5C with hold-down kit)

ENPHASE BREAKERS	OFF-THE-SHELF BREAKERS	USED FOR	SCENARIO 1: SOLAR ONLY	SCENARIO 2: SOLAR + BATTERY WITHOUT BACKUP	SCENARIO 3: SOLAR + BATTERY WITH BACKUP	SCENARIO 4: SUNLIGHT BACKUP
BRK-20A-2P-240V	Eaton BR220, Siemens Q220, GE/ABB THQL 2120	PV branch circuits, IQ Battery	Yes	Yes	Yes	Yes
BRK-20A-2P-240V-B	Eaton BR220B	PV branch circuits, IQ Battery	No*	No*	No*	No*
BRK-40A-2P-240V	Eaton BR240, Siemens Q240, GE/ABB THQL 2140	IQ Battery	Yes	Yes	No	No
BRK-40A-2P-240V-B	Eaton BR240B	IQ Battery	No*	No*	No	No
BRK-60A-2P-240V	Eaton BR260, Siemens Q260, GE/ABB THQL 2160	IQ Battery	Yes	Yes	No	No

X-IQ-AM1-240-5 or X-IQ-AM1-240-5C (IQ Combiner 5/5C without hold-down kit)

ENPHASE BREAKERS	OFF-THE-SHELF BREAKERS	USED FOR	SCENARIO 1: SOLAR ONLY	SCENARIO 2: SOLAR + BATTERY WITHOUT BACKUP	SCENARIO 3: SOLAR + BATTERY WITH BACKUP	SCENARIO 4: SUNLIGHT BACKUP
BRK-20A-2P-240V	Eaton BR220, Siemens Q220, GE/ABB THQL 2120	PV branch circuits, IQ Battery	Yes	Yes	No	No
BRK-20A-2P-240V-B	Eaton BR220B	PV branch circuits, IQ Battery	No*	No*	Yes	Yes
BRK-40A-2P-240V	Eaton BR240, Siemens Q240, GE/ABB THQL 2140	IQ Battery	Yes	Yes	No	No
BRK-40A-2P-240V-B	Eaton BR240B	IQ Battery	No*	No*	No	No
BRK-60A-2P-240V	Eaton BR260, Siemens Q260, GE/ABB THQL 2160	IQ Battery	Yes	Yes	No	No

* Can be used but is not necessary

NOTE:

- For scenarios with backup, IQ Battery breakers will be housed in the IQ System Controller.
- DER (distributed energy resources) and DG (distributed generation) breakers are equivalent terms and can be used interchangeably.

IQ Combiner 5/5C SKUs without hold-down kit and with hold-down kit support the following grid supplies:

- 120 V L-N and 240 V L1-L2, 60 Hz.
- 120 V L-N and 208 V L1-L2, 60 Hz.

NOTE:

- The breakers in the table above are all rated for operation up to 120 V L-N and 240 V L1 -L2. Hence, these breakers can also be used in a 120 V L-N and 208 V L1-L2 system.

Installation preparation checklist

ITEM #	ITEM	TICK MARK IF COMPLETED
1	Download the Enphase Installer App (version 3.X or later). Open the app and log in to your Enphase Account. To download, go to https://enphase.com/installers/apps. Ensure that the latest version of IQ Gateway software is downloaded.	
2	Ensure all products and installation tools (refer to the previous page for a complete list) are on-site.	
3	Decide on an internet connectivity option (Wi-Fi, Mobile Connect, or Ethernet*). For Ethernet cable, use 802.3, Cat5E, or Cat6, unshielded twisted pair (UTP). Do not use a shielded twisted pair (STP) cable. For a grid-forming system, a Mobile Connect and an additional internet connection (Wi-Fi or Ethernet) are required.	
4	Make a note of the IQ Combiner serial number on the installation map.	

* Sites that require a grid-tied battery or grid-forming backup systems capability must have a Mobile Connect and at least one additional mode of connecting to the internet.

Section A

Mounting the product

Plan a location for the IQ Combiner 5/5C



- IQ Combiner 5/5C is NEMA type 3R rated and can be mounted both indoors and outdoors[1].
- Install this product where cables from the PV/IQ Combiner, grid, and IQ Battery are easily accessible and can be terminated at the IQ Combiner 5/5C.





- This product is designed to be installed on a vertical wall only. Do not install this product flat on the ground.
- The mounting surface must be able to support 87 lb.
- Follow all local standards and regulations during installation.



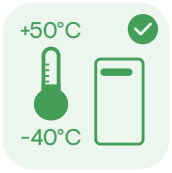

- The product operates within an ambient temperature range from -40°C to 50°C (-40°F to 122°F).
- Do not install this product in a place exposed to direct sunlight throughout the day[2].
- Do not install the product in a very dusty environment.



- This product must not be installed at altitudes above 2,500 m (8,200 ft).



- In flood-prone areas, ensure that the clearance from the ground is sufficient to avoid water ingress.

[1] The enclosure is indoor or outdoor rated and designated to withstand exposure to moisture, rainfall, and harsh environmental conditions. It is not recommended to install the unit directly under any downspouts, faucets, or similar water sources.

[2] It is safe to install the IQ Combiner in direct sunlight. The product is designed to operate at an ambient temperature of -40°C to 50°C, even under direct sunlight. Extended exposure to direct sunlight in higher ambient temperature conditions may cause the internal breakers to trip when operating at full load.

Section A - Mounting the product

Step 1:
Minimum clearance

This product must be installed with a mandatory clearance of 3 ft from the ground.

Follow all local standards and regulations related to the mounting of an IQ Combiner 5/5C.

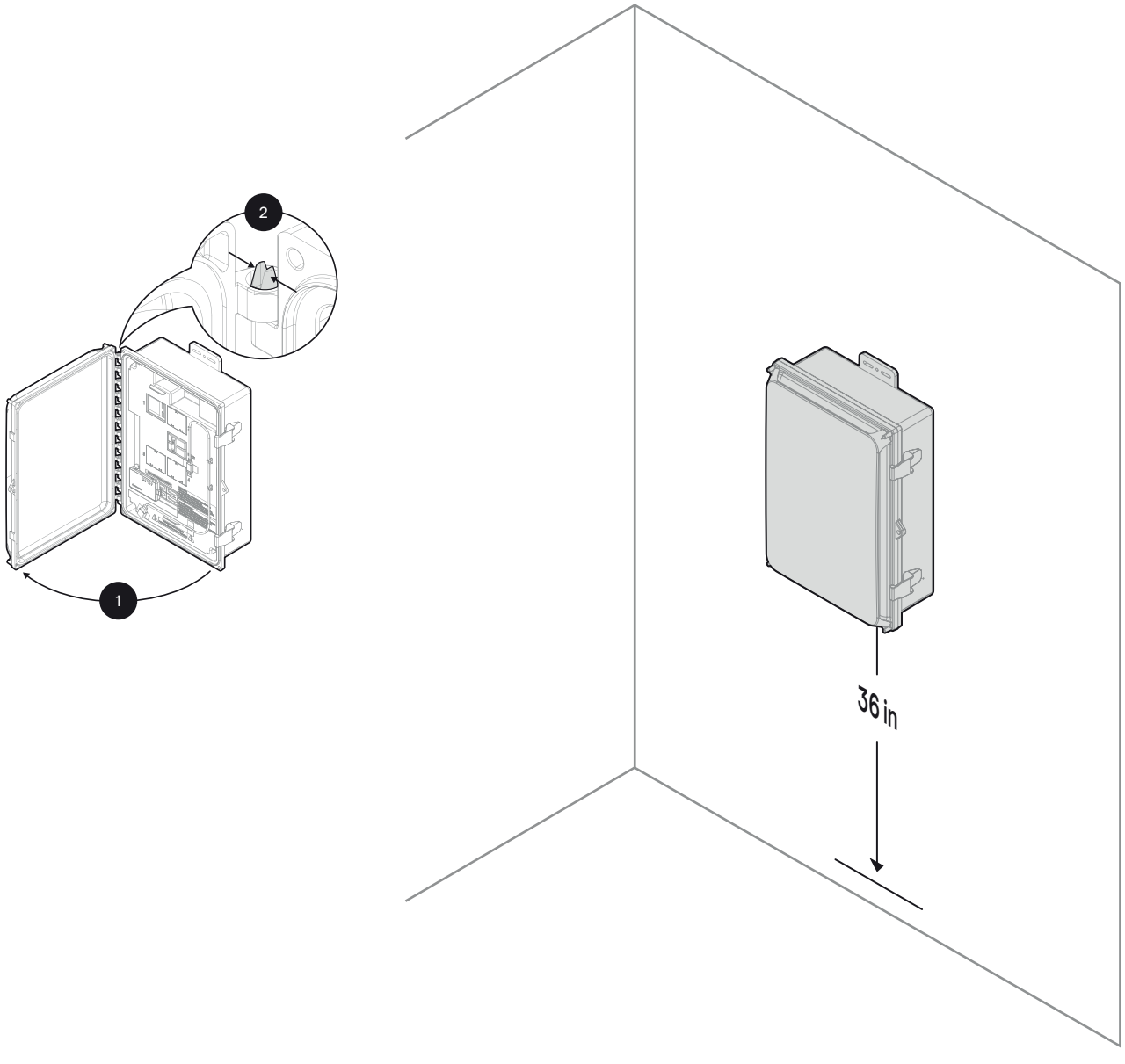

Step 2:
Detaching the door

- Pinch the top of the hinge rod using a pair of needle-nosed pliers.
- Slide the door up and remove it.
- Set the door aside for later reattachment.

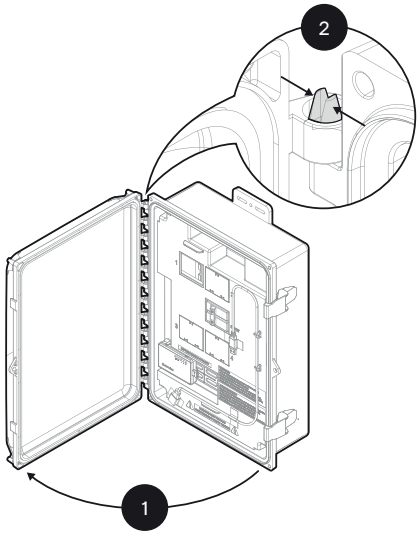

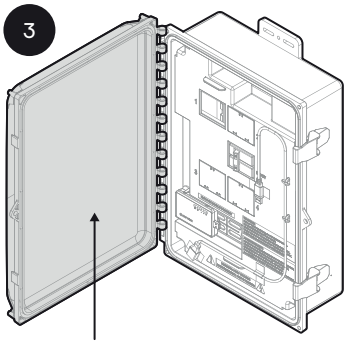

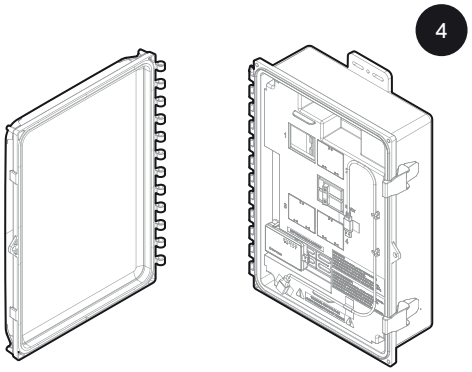

⚠ **WARNING:** Risk of equipment damage. Do not remove the pre-installed heat shield attached to the enclosure door.

Step 3:
Removing the dead front

- Unplug the Mobile Connect (for IQ Combiner 5C) and remove the plastic dead front with the integrated Mobile Connect on the dead front. It is not necessary to completely remove the screws of the dead front.

- Remove the filler plate on the dead front for each breaker position to be used. To remove the filler plate, press the single latch inward while gently pushing the filler plate out.

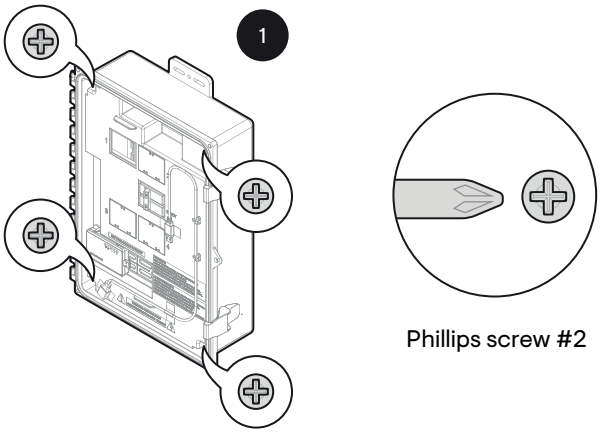

Phillips screw #2

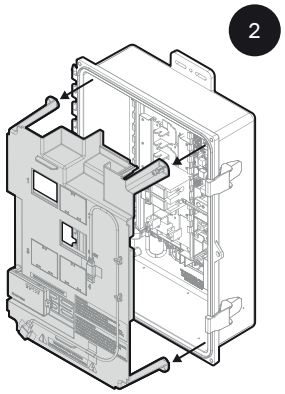

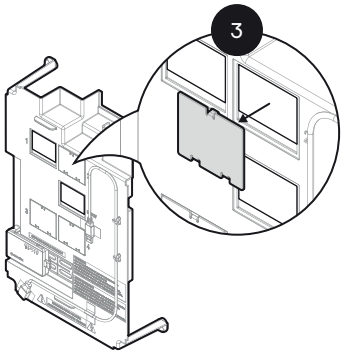

⚠ **WARNING:** Risk of equipment damage. Always unplug the USB cable from the IQ Gateway USB port prior to removing the dead front.

⚠ **WARNING:** Risk of electric shock. To maintain the warranty, do not modify the dead front other than to remove or replace filler plates, as needed.

Step 4: Mounting the IQ Combiner 5/5C

Please note the following:

- Place the IQ Combiner 5/5C on the wall so that the mounting holes at the middle of the mounting tabs are aligned with the center of the stud. Mark the top center hole for predrilling and keep the unit aside safely.
- Adhere to local standards. Use washers between fastener heads and wall-mount brackets.

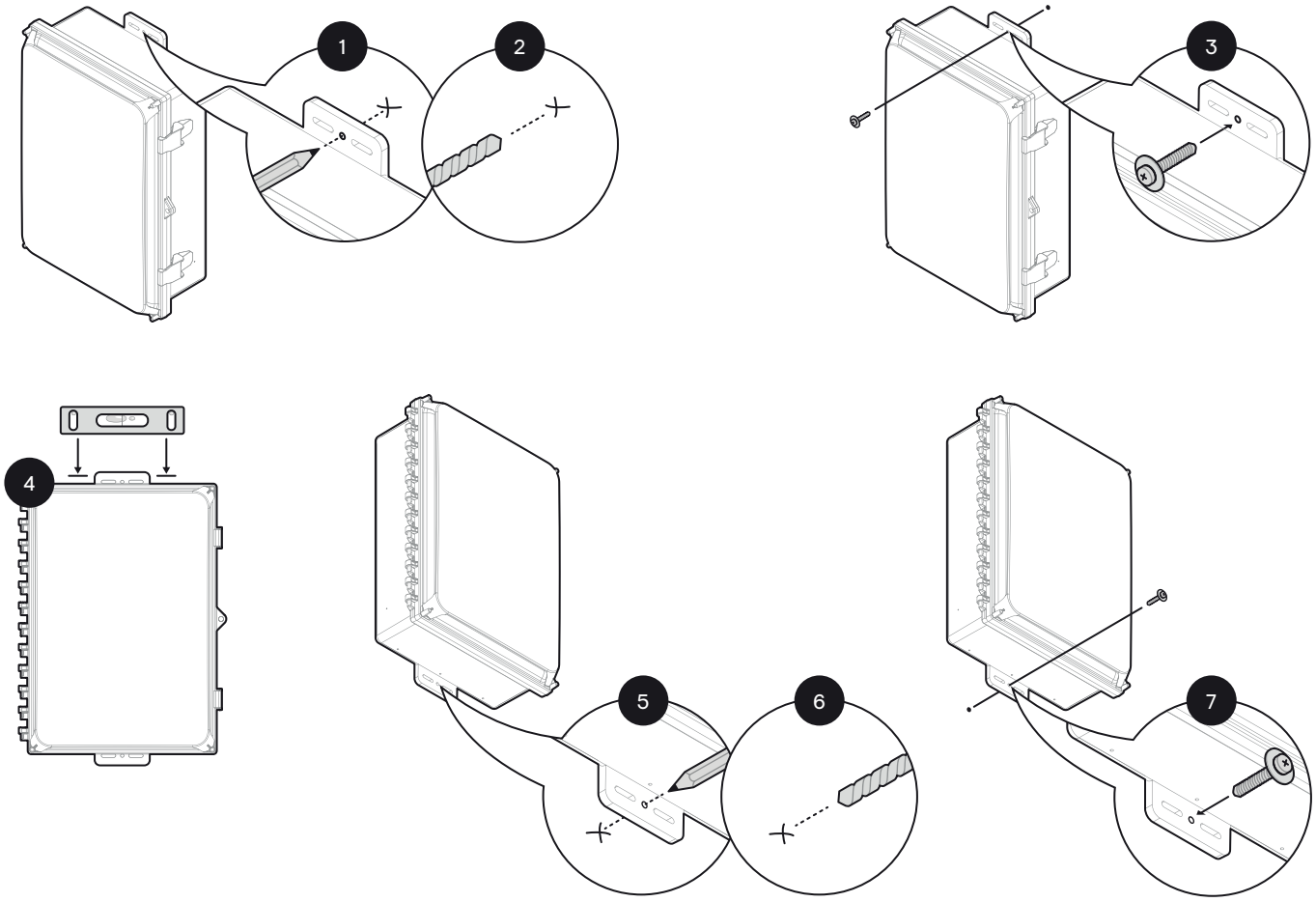

Section B

Mounting the breakers

Internal view of IQ Combiner 5/5C

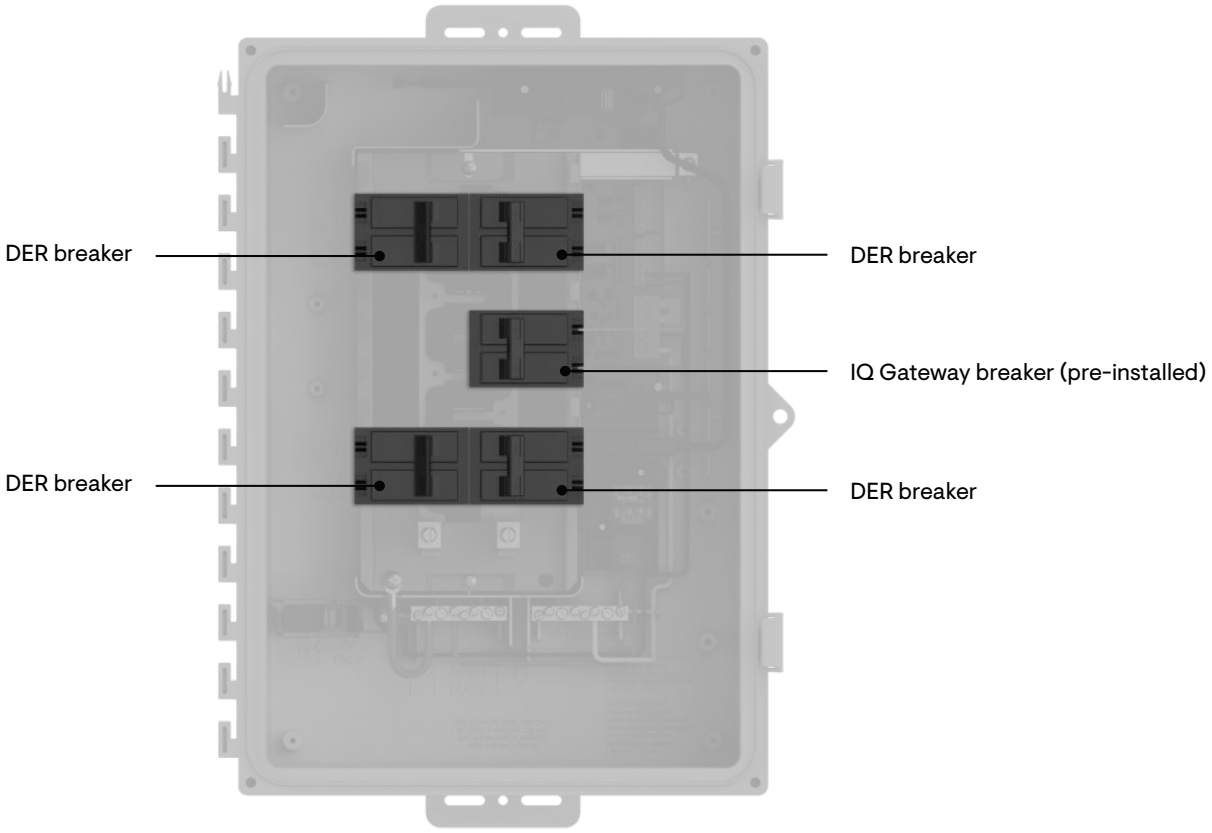

NOTE: On grid-forming sites, IQ Batteries must land in the IQ System Controller 3/3G and must not be installed in the IQ Combiner.

NOTE: Follow all NEC and local electrical codes for breaker installation.

Section B - Mounting the breakers

Install DER breakers

NOTE: Follow all steps when using X-IQ-AM1-240-5-HDK or X-IQ-AM1-240-5C-HDK (IQ Combiner 5/5C with hold-down kit). For X-IQ-AM1-240-5 or X-IQ-AM1-240-5C (IQ Combiner 5/5C without hold-down kit), follow only step 3.

WARNING: Risk of electrocution and equipment damage! Do not install the hold-down kit retainer when IQ Combiner is energized.

1. Unscrew the captive screws from the hold-down kit retainer.
2. Remove the metal sheet retainer from the hold-down kit.
3. Snap the breaker onto the busbar using the breaker positions indicated. The hold-down kit can be used for one or more (up to four) DER circuit breakers. When installing both PV and IQ Battery on the IQ Combiner, it would be easier to install the PV breakers on the lower breaker slots and IQ Battery breakers on the upper breaker slots. This is only a recommendation; PV & IQ Battery breakers can be installed on any DER breaker slot in the IQ Combiner.
4. Assemble the sheet metal retainer onto the plastic part.
5. Torque captive screws. Avoid over-torquing.

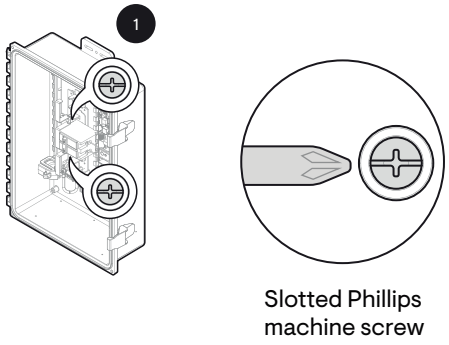

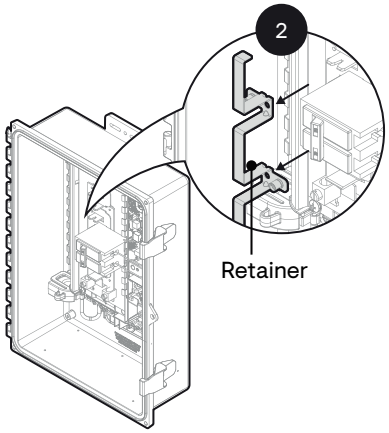

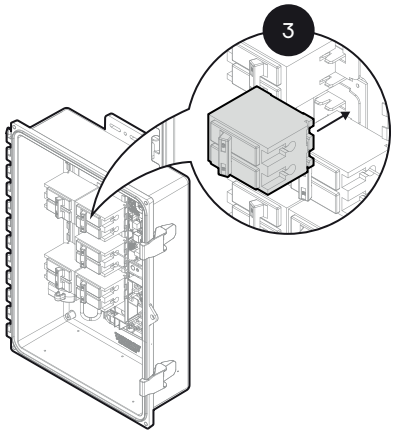

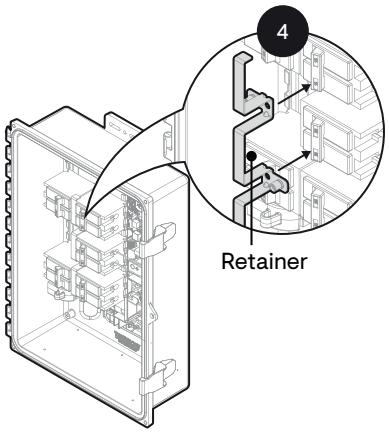

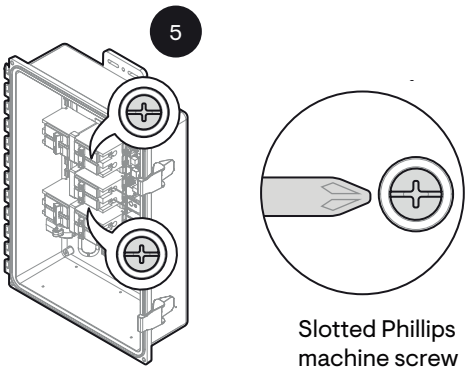

Section C

Wiring

Drill conduits

The bottom and sides of the IQ Combiner 5/5C are the best locations to drill holes for conduit fittings. The rear conduit entry below the busbar assembly is also supported.

Use a snap punch or other type of center punch to prevent the drill from wandering. Drill a pilot hole with a smaller drill before using a step drill bit.

Use only UL Listed rain-tight conduit fittings for wire entry into the enclosure.

Recommendation:

1. IQ Battery
2. PV - Bottom
3. Output to main load center/IQ System Controller
4. Control cables

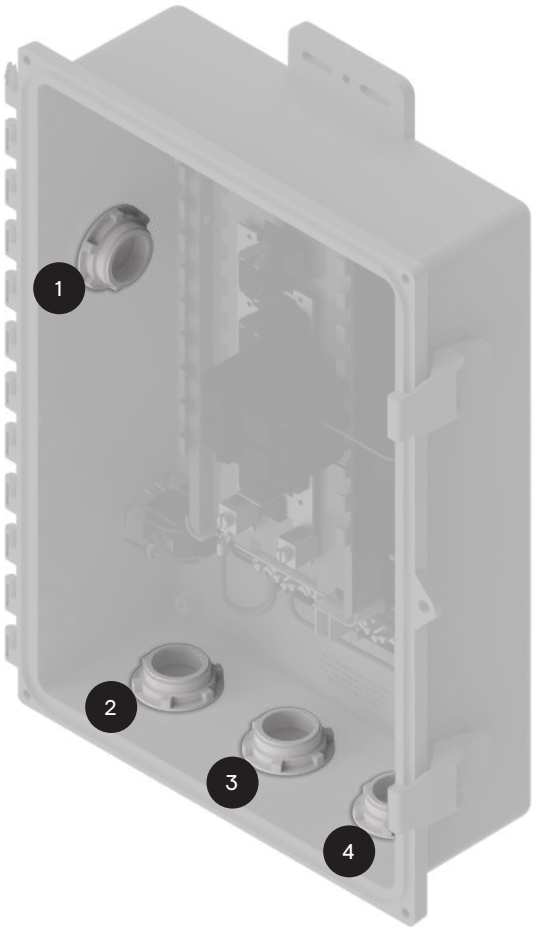

⚠ **WARNING:** Risk of equipment damage. Do not drill conduit holes on the top of the box or at any location that allows moisture ingress.

⚠ **WARNING:** When drilling, consider the internal parts of the combiner. Ensure that the holes do not interfere with the internal workings, mechanics, or the dead front legs in the corners of the combiner.

Best practice: Use a stepped drill bit to make the conduit holes. Using a hole saw may crack the plastic housing.
As an alternative, use a sharp chassis punch with caution.

✓ **NOTE:** On grid-forming sites, IQ Batteries must land in the IQ System Controller 3/3G and must not be installed in the IQ Combiner.

Wire size and torque table

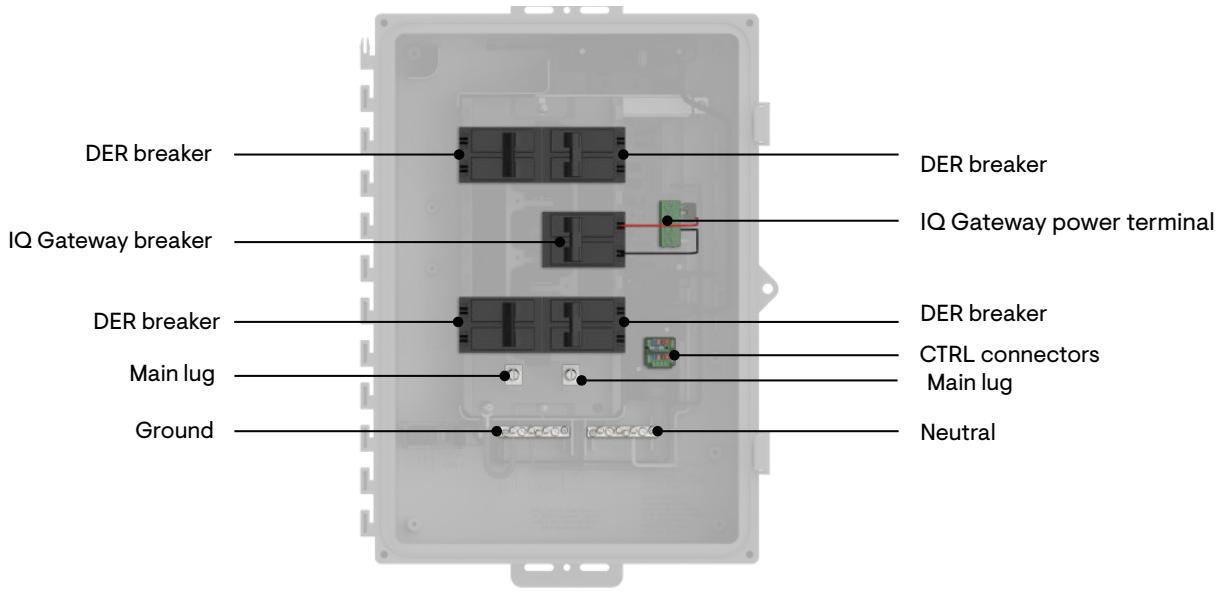

CONNECTION	WIRE SIZES	TORQUE
DER breaker	14-10 AWG 8 AWG 6-4 AWG	2.2 N m (20 lb-in) 2.8 N m (25 lb-in) 3.0 N m (27 lb-in)
DER breaker (for 60 A circuit breaker)	4-1/0 AWG	5.0 N m (45 lb-in)
IQ Gateway breaker	14-10 AWG	2.26 N m (20 lb-in)
IQ Gateway power terminals	14-10 AWG	1.4 N m (12.4 lb-in)
Large screw - Neutral and ground	2-1/0 AWG 14-3 AWG	5.6 N m (50 lb-in) 5.1 N m (45 lb-in)
Small screw - Neutral and ground	6 AWG 8 AWG 10-14 AWG	3.6 N m (32 lb-in) 2.6 N m (23 lb-in) 2.3 N m (20 lb-in)
Main lug	10-4 AWG 3-2/0 AWG	5.0 N m (45 lb-in) 5.6 N m (50 lb-in)
CTRL connectors		
CTRL cables (C1, C2) Drain cables	18 AWG 18 AWG	0.2 N m (1.77 lb-in) 0.2 N m (1.77 lb-in)

Copper conductors only, rated min. 75°C. Follow NFPA 70 (NEC) or CSA C22. 1 part 1, and all local codes. For DER breakers larger than 20 A, use wire insulated for 90°C based on 75°C ampacities.

NOTE: The IQ Gateway is pre-wired to a 15 A breaker in the IQ Combiner. Any additional load installed on this circuit should use a minimum conductor size of 14 AWG. The typical current drawn by the IQ Gateway is 20 mA. The maximum continuous current of all loads protected by this breaker should not exceed 12 A. When adding additional loads to the breaker, the installer must comply with all NEC and local electrical codes.

Wire the input from the PV

1. Use copper conductors sized to meet local code requirements and voltage drop/rise considerations.
2. Bring in the wires from each AC branch circuit.
3. Connect the ground (green or green/yellow) to the ground bar.
4. Pass the L1 conductors from each PV branch circuit through the Production CT in the same direction as the arrow on the side of the CT.
5. Connect L1 and L2 (usually one black and one red) from each AC branch circuit (PV and/or battery) to the circuit breaker(s). Observe the L1 and L2 polarity marking at each breaker position.
6. Torque all connections as indicated in the table on previous page.
7. For IQ8 grid-forming installations (i.e., with an IQ System Controller 3/3G), hold-down kits must be used for the breakers for PV branch circuits as per the NEC code. The IQ Combiner 5/5C SKU's (X-IQ-AM1-240-5-HDK and X-IQ-AM1-240-5C-HDK) come pre-installed with the hold-down kit.

NOTE: PV branch circuit cables have a conductor size of 12 AWG and need to be protected with a 20 A breaker.

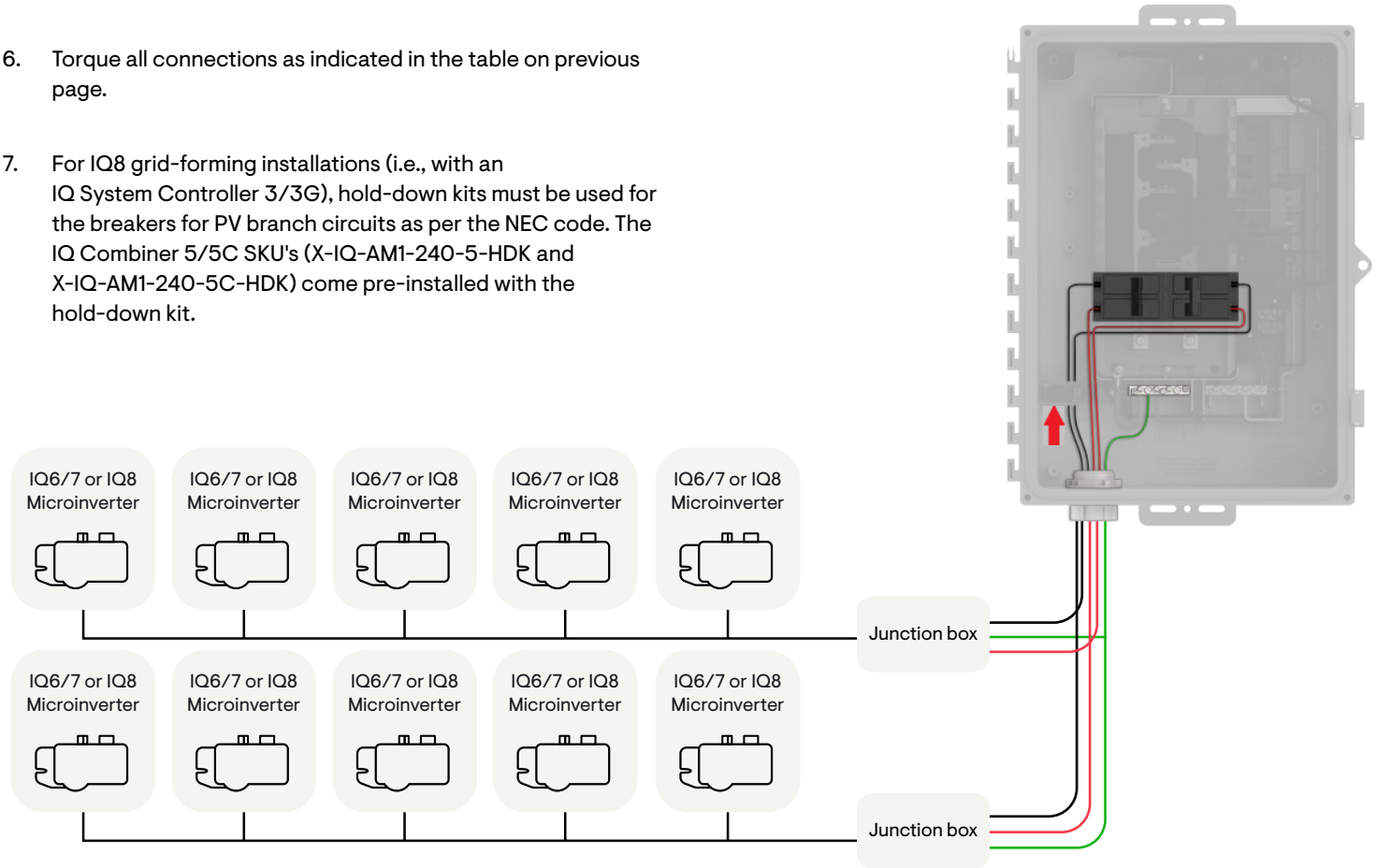

Wire the input from the IQ Batteries

1. Use copper conductors sized to meet local code requirements and voltage drop/rise considerations.

2. Bring in the wires from the IQ Batteries.

3. Connect the ground (green or green/yellow) to the ground bar.

4. Connect L1 and L2 (usually one black and one red) from the IQ Battery to the circuit breaker(s). Observe the L1 and L2 polarity marking at each breaker position.

5. When installing both the PV and IQ Battery on the IQ Combiner, it would be easier to install the PV on the lower breaker slots and IQ Battery on the upper breaker slots. This is only a recommendation; PV & IQ Battery breakers can be installed on any DER breaker slot in the IQ Combiner.

6. Torque all connections as indicated in the table on the previous page.

7. For IQ8 grid-forming installations (that is, with an IQ System Controller 3/3G), hold-down kits must be used for the breakers for IQ Battery circuits as per the NEC code. The IQ Combiner 5/5C SKUs (X-IQ-AM1-240-5-HDK and X-IQ-AM1-240-5C-HDK) come pre-installed with the hold-down kit.

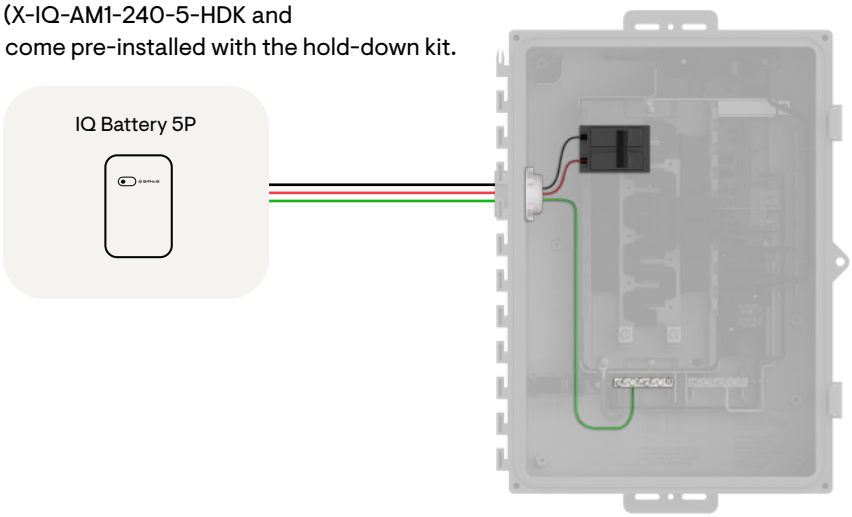

NOTE: Do not pass conductors from IQ Battery 5P branch circuits through the Production CT. This will distort production readings.

NOTE: On grid-forming sites, IQ Batteries must land in the IQ System Controller 3/3G and must not be installed in the IQ Combiner.

Section C - Wiring

Wire the IQ Gateway

The IQ Combiner 5/5C ships with the IQ Gateway PCB pre-wired to the IQ Gateway breaker.

For grid-forming systems (with the IQ System Controller on site), the IQ Gateway from the IQ System Controller must be powered.

1. Disconnect the power cables from the IQ Gateway breaker to the IQ Gateway L1 and L2.

2. Connect IQ Gateway L1 and L2 to the 20 A L1 and L2 terminals, respectively, of the pre-installed quad breaker on the autotransformer position in the http://enphase.com/download/iq-system-controller-3-quick-install-guide.

Grid-tied systems

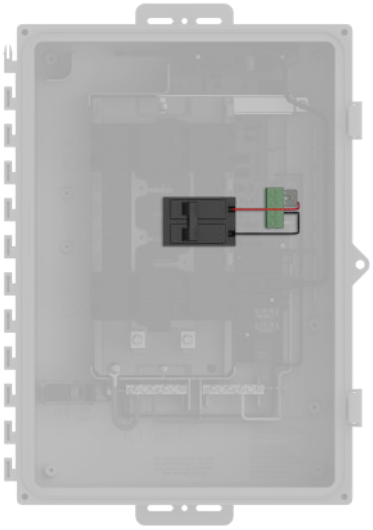

Grid-forming systems

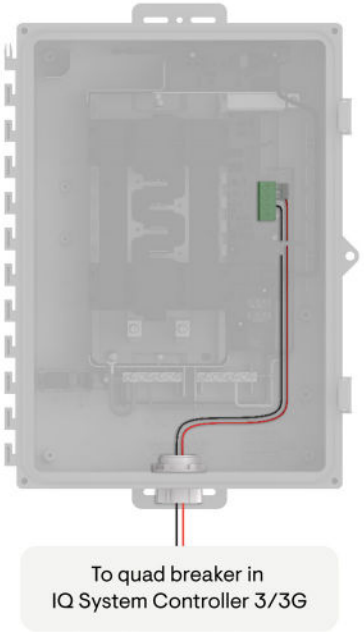

NOTE: The IQ Gateway L2 terminal is shorted to the L3 terminal using a jumper. While powering the L2 of the IQ Gateway, loosen the jumper from the L2 terminal, insert the wire, and then tighten it to ensure both the wire and jumper are properly installed. Do not loosen the jumper connection on the L3 terminal.

Wire the output connections

Install a breaker on the main load center (for grid-tied systems) or on the IQ System Controller 3/3G (for grid-forming systems) for connecting the IQ Combiner 5/5C.

⚠ **WARNING:** Risk of equipment damage. Observe bend radius requirements when routing wires.

NOTE: Torque all connections as indicated in the table above.

Grid-tied systems

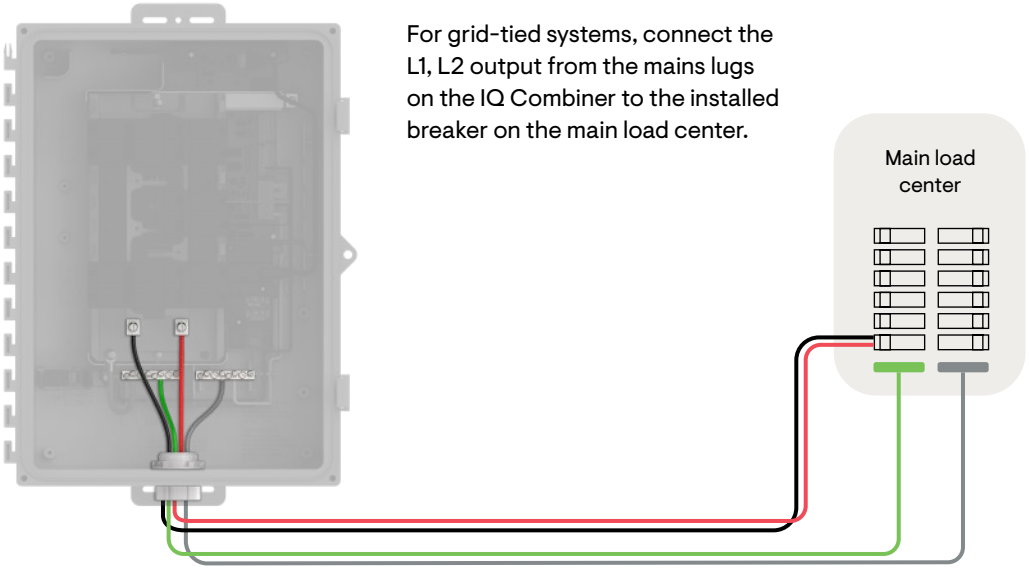

For grid-tied systems, connect the L1, L2 output from the mains lugs on the IQ Combiner to the installed breaker on the main load center.

Grid-forming systems

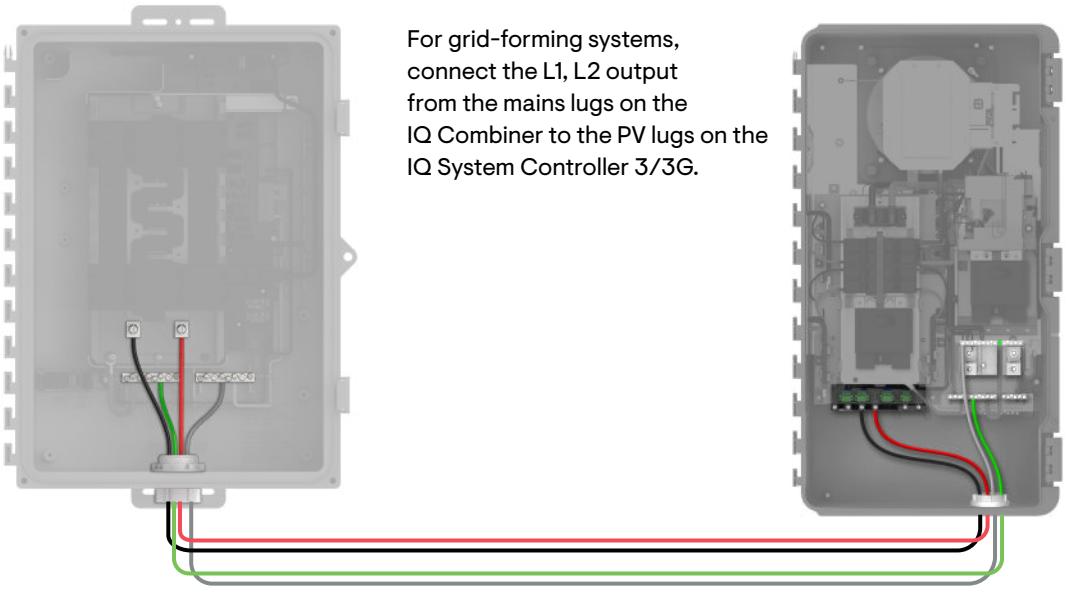

For grid-forming systems, connect the L1, L2 output from the mains lugs on the IQ Combiner to the PV lugs on the IQ System Controller 3/3G.

Section C - Wiring

Wiring the control (CTRL) cable to headers

NOTE: The control cable required for IQ Battery 5P, IQ Combiner 5/5C, and IQ System Controller 3/3G must be compliant with UL 3003, UL 1277, and UL 83 standards. The Enphase Control Cable (SKU: CTRL-SC3-NA-01) has optimal impedance and has been validated for optimal system performance. Third-party cables may not have the correct characteristic impedance and consequently, may not work reliably. Enphase cannot guarantee performance when a third-party control cable is used.

1 Control cable components

COMPONENT	PURPOSE
Signal wires (blue, orange, black, red)	Communication between the Enphase components
Drain cable	For grounding the control cable shield
Termination resistor	Terminate the daisy chain of the control cable at the extreme ends

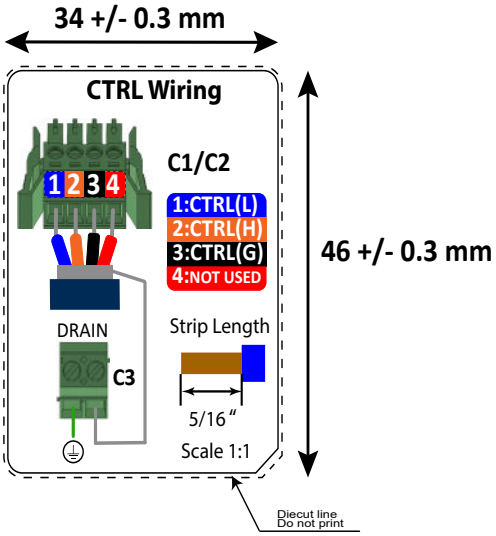

2 Strip the cables for the connection

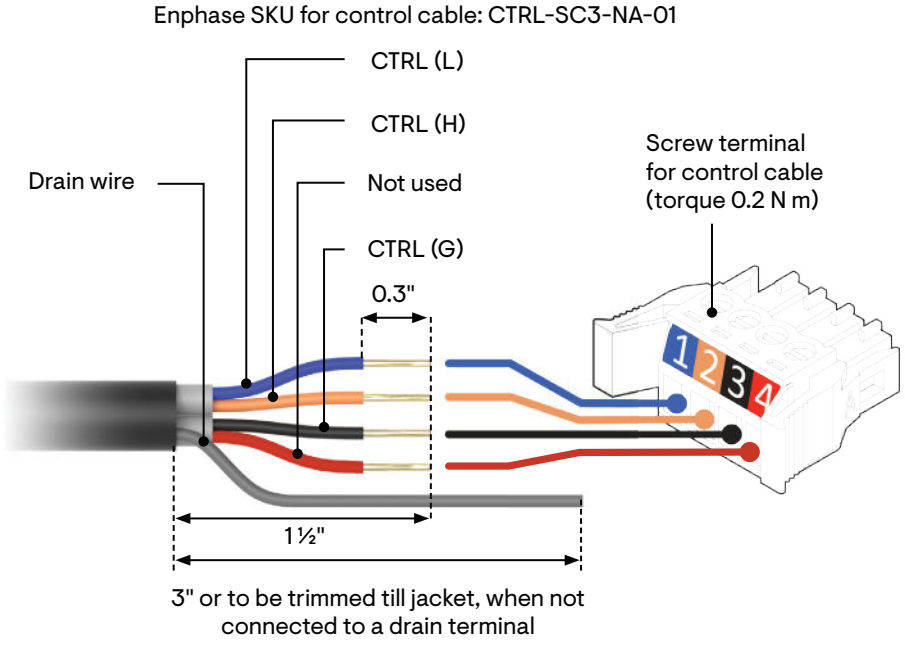

NOTE: You may leave the 4th CTRL cable (red cable) unconnected, too, as advised in the previous revisions of this quick install guide.

Wiring the control (CTRL) cable to headers

3 Control cable routing inside IQ Combiner 5/5C

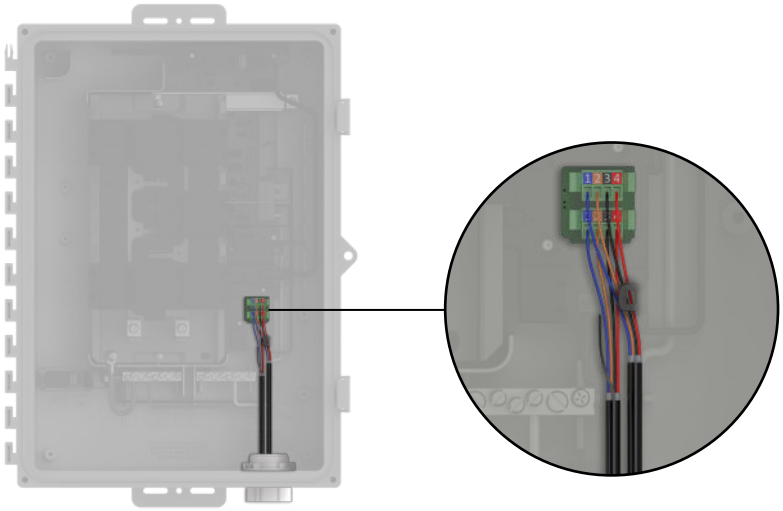

4a Configuration 1: IQ Combiner 5/5C is a terminating node

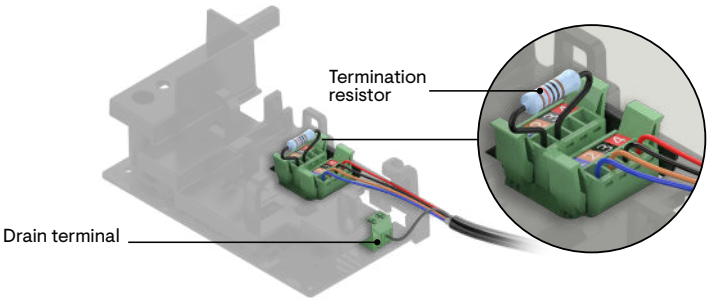

1. Do not remove the termination resistor on the top header.
2. Wire the control (CTRL) cable to the bottom header.

4b Configuration 2: IQ Combiner 5/5C is a non-terminating node

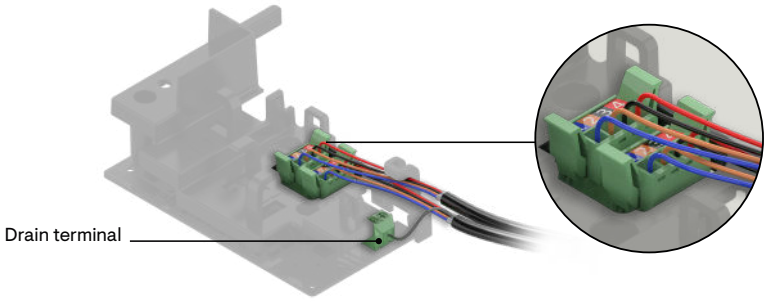

1. Remove the termination resistor on the top header.
2. Wire the control (CTRL) cable to both headers.

Control (CTRL) wiring between system components

Control wiring guidance for the Enphase Energy System:
Refer to the following wiring sequences to understand the position of the header with termination resistor, wiring order, and drain wire termination location.

NOTE: The cumulative length of CTRL wiring across the system cannot exceed 250 feet to ensure the system operates as per specifications.

NOTE: Ensure these guidelines are followed to avoid failures during system commissioning:

- One header with a termination resistor should be installed on each component at the extreme end of the control network.
- The drain wire should only be terminated on one end of the control wiring between system components. Connecting a drain wire at both ends of the section can result in communication issues.
- It is recommended that the drain wire be terminated at the component from which control wiring for the section is initiated.

NOTE: Ensure to strip the conductor for control cable length to allow for drain wire to adequately reach drain port, on one side of the cable (only).

- The same conduits can be used for power and control wire routing only when using an Enphase CTRL cable, that is, CTRL-SC3-NA-01.
- Do not wire the System Shutdown Switch (SSD) 4-wire cables to the control cable header. Doing so will result in a communication breakdown of the Enphase Energy System.

Sequence 1a:
IQ Combiner 5/5C → IQ System Controller 3G → IQ Battery(s) 5P

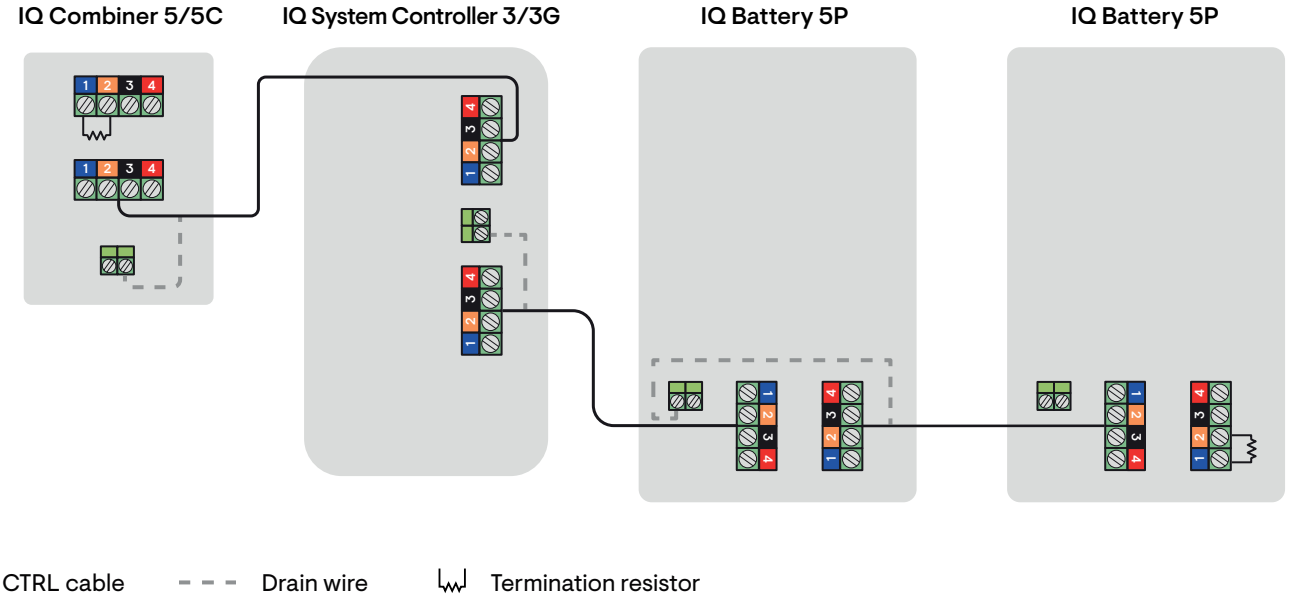

Section C - Wiring

Sequence 1b:
IQ Combiner 5/5C → IQ System Controller 3/3G → IQ Battery(s) 5P
(this is only applicable to IQ System Controller 3, where a third DER port can be used for additional batteries)

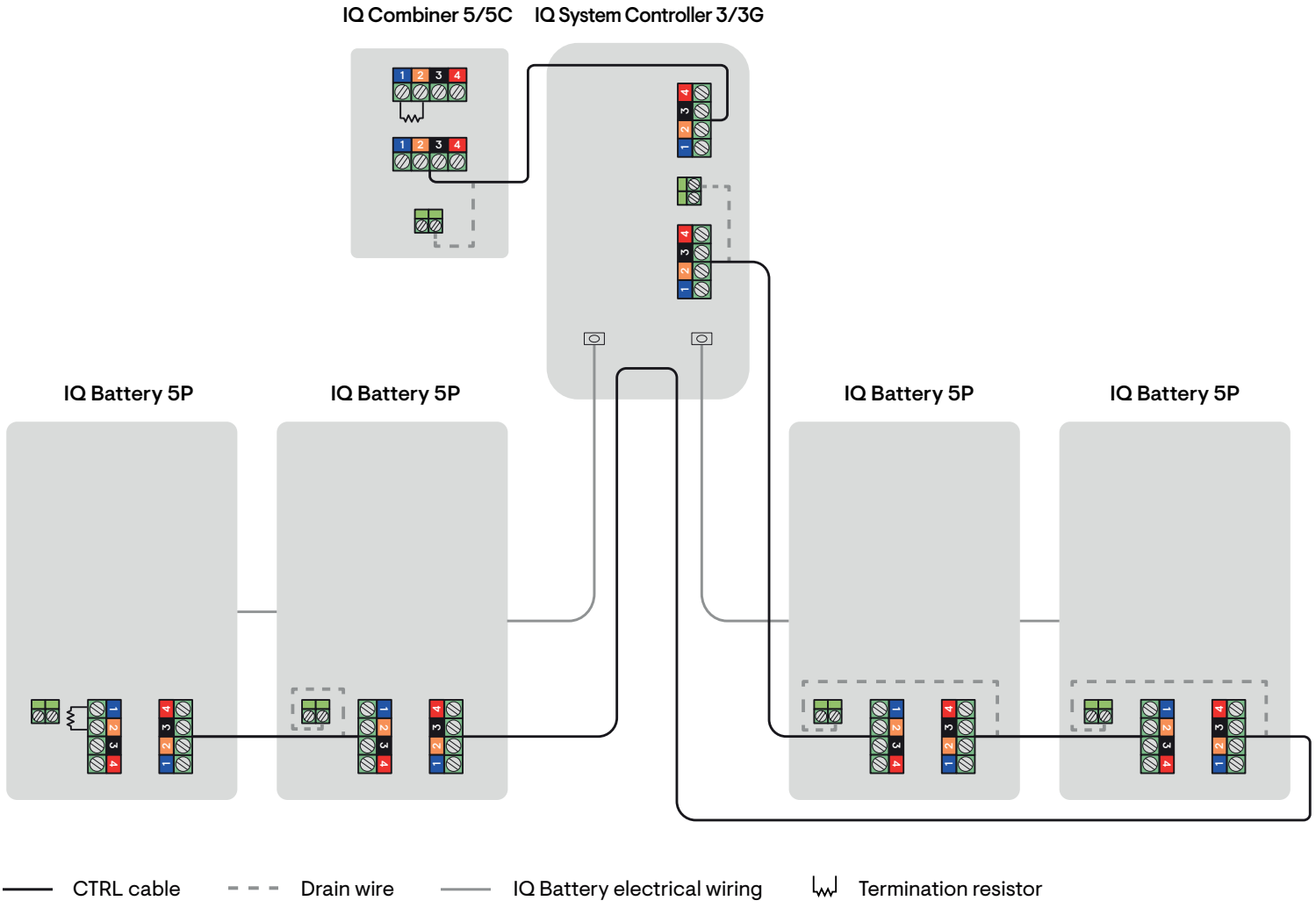

Section C - Wiring

Sequence 2:
IQ System Controller 3/3G → IQ Combiner 5/5C → IQ Battery(s) 5P

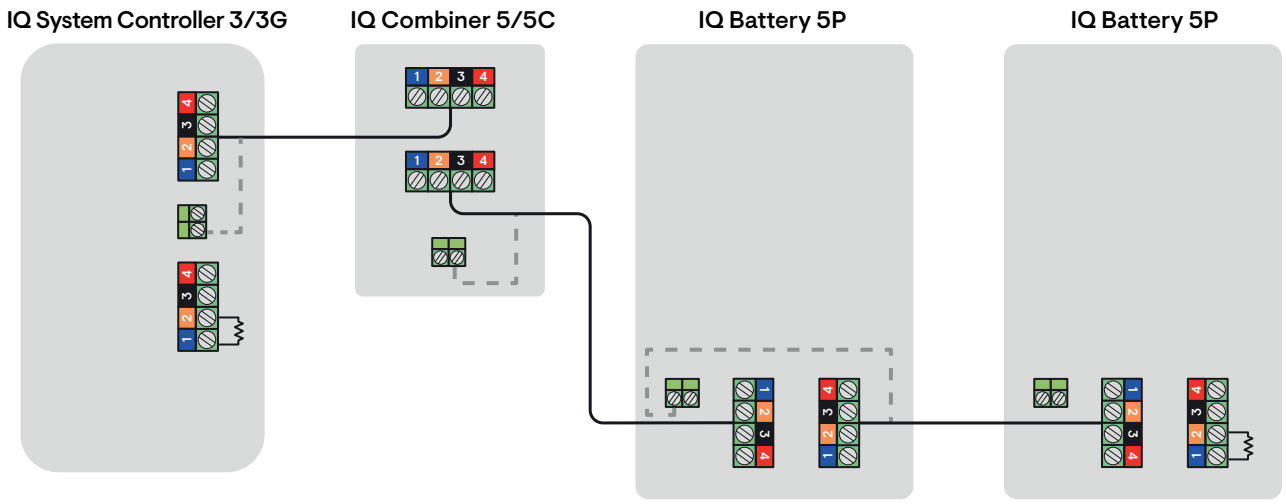

CTRL cable Drain wire Termination resistor

Sequence 3:
IQ Combiner 5/5C → IQ Battery(s) 5P → IQ System Controller 3/3G

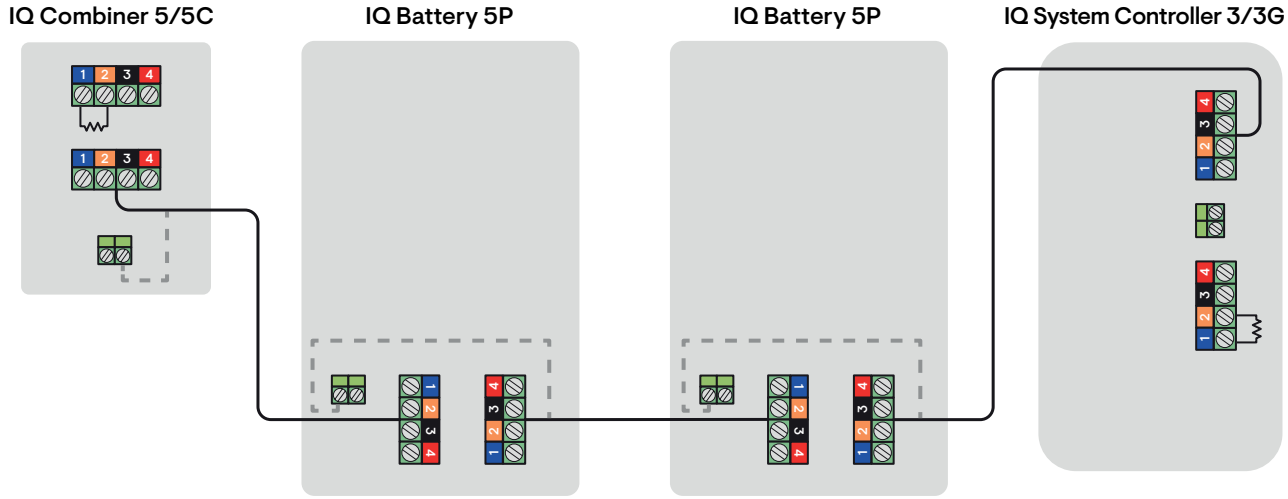

CTRL cable Drain wire Termination resistor

Section C - Wiring

Sequence 4:
IQ Combiner 5/5C → IQ Battery(s) 5P

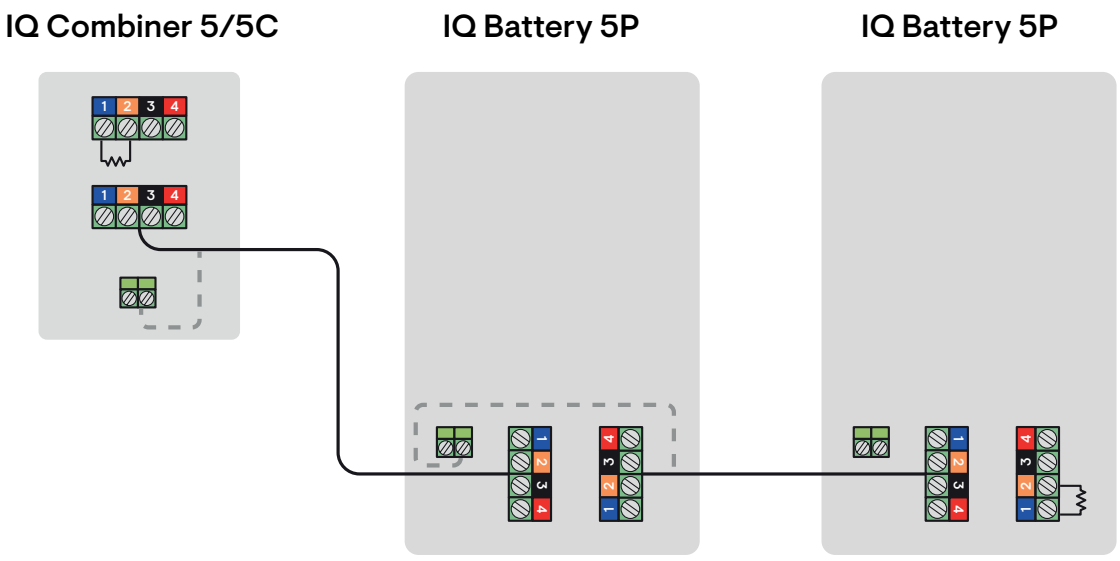

CTRL cable Drain wire Termination resistor

The table below provides the termination resistor locations for the above sequences:

CONTROL WIRING SEQUENCE	TERMINATION RESISTOR LOCATIONS
IQ Combiner 5/5C → IQ System Controller 3G → IQ Battery(s) 5P	1. IQ Combiner 5/5C 2. Last IQ Battery 5P in the daisy chain
IQ Combiner 5/5C →IQ Battery(s) 5P → IQ System Controller 3/3G	1. IQ Combiner 5/5C 2. IQ System Controller 3/3G
IQ System Controller 3/3G → IQ Combiner 5/5C → IQ Battery(s) 5P	1. IQ System Controller 3/3G 2. Last IQ Battery 5P in the daisy chain
IQ Combiner 5/5C → IQ Battery(s) 5P	1. IQ Combiner 5/5C 2. Last IQ Battery 5P in the daisy chain

Section D

Installing the current transformers

1. Production metering

   - The IQ Gateway printed circuit board inside the IQ Combiner 5/5C is pre-wired at the terminal blocks for power and production metering connections.
   - One solid-core current transformer (CT) is used for revenue -grade production metering.



2. Consumption metering

   - Two clamp-style current transformers (CT) are provided with the IQ Combiner 5/5C for consumption metering.
   - The CTs are installed in the main load center for grid-tied systems and in the IQ System Controller for grid-forming systems.

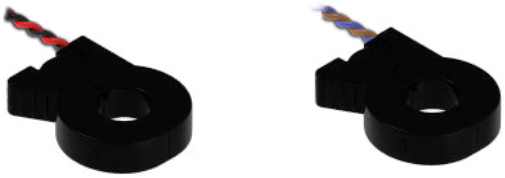

3. IQ Battery metering

   - One clamp-style current transformer (CT) is provided with the IQ Combiner 5/5C for IQ Battery 5P metering.
   - The CTs are installed in the IQ Combiner 5/5C for grid-tied systems and in the IQ System Controller for grid-forming systems.



Consumption CT installation in grid-tied systems (load with solar configuration)

Consumption CTs are installed on the service entrance when a site is required to monitor the net import/export to the grid.

This is mandatory on sites where power export limiting (PEL) restrictions must be met.

Ensure that the main load center wires are de-energized until you have secured the CT wires in the terminal blocks.

Clamp the red and black C1 CT on the load center feed wire Line 1 (matching the IQ Gateway's **L1** voltage terminal) with the CT arrow pointing toward the load (away from the grid).

Clamp the purple and brown C2 CT on the load center feed wire Line 2 (matching the IQ Gateway's **L2** voltage terminal) with the CT arrow pointing toward the load (away from the grid).

Tighten all connections using a 5 in-lb torque.

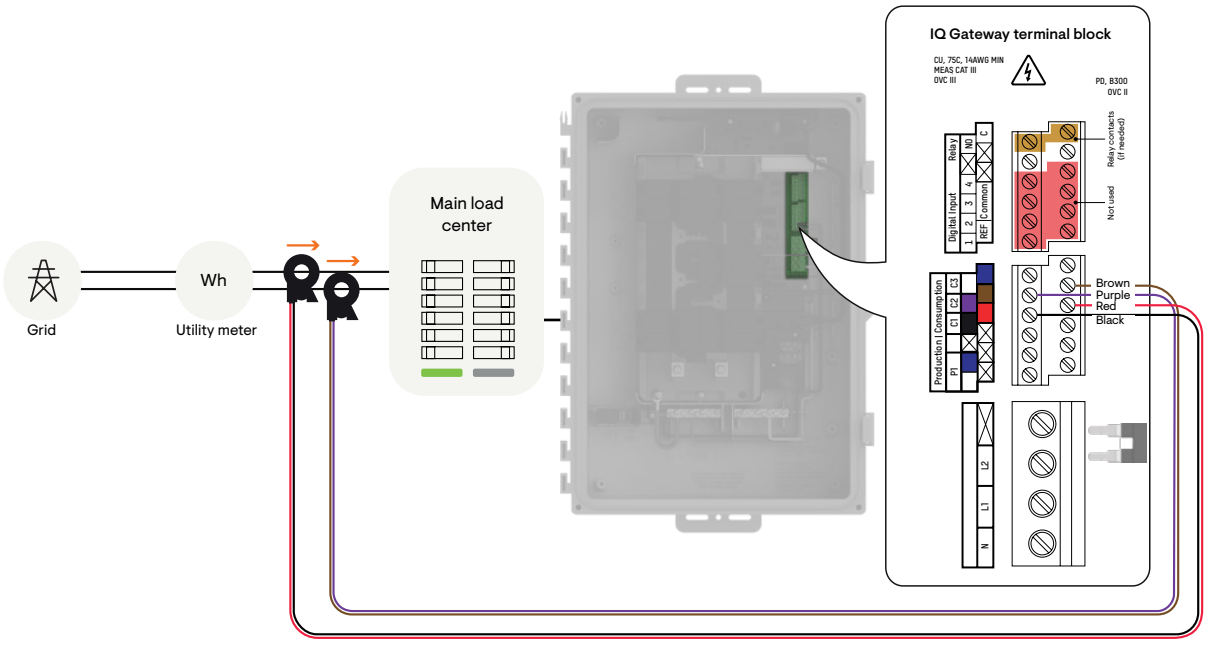

WARNING: Risk of electrocution and equipment damage! Do not install CTs when current is flowing in the sensed circuit. Always install CT wires in the terminal blocks before energizing the sensed circuit.

Consumption CT installation in grid-tied systems (load-only configuration)

Consumption CTs are installed on the home loads panel when a site needs to only monitor the consumption by the home loads.

Ensure that the main load center wires are de-energized until you have secured the CT wires in the terminal blocks.

Clamp the red and black C1 CT on the load center feed wire Line 1 (matching the IQ Gateway's **L1** voltage terminal) with the CT arrow pointing toward the load (away from the grid).

Clamp the purple and brown C2 CT on the load center feed wire Line 2 (matching the IQ Gateway's **L2** voltage terminal) with the CT arrow pointing toward the load (away from the grid).

Tighten all connections using a 5 in-lb torque.

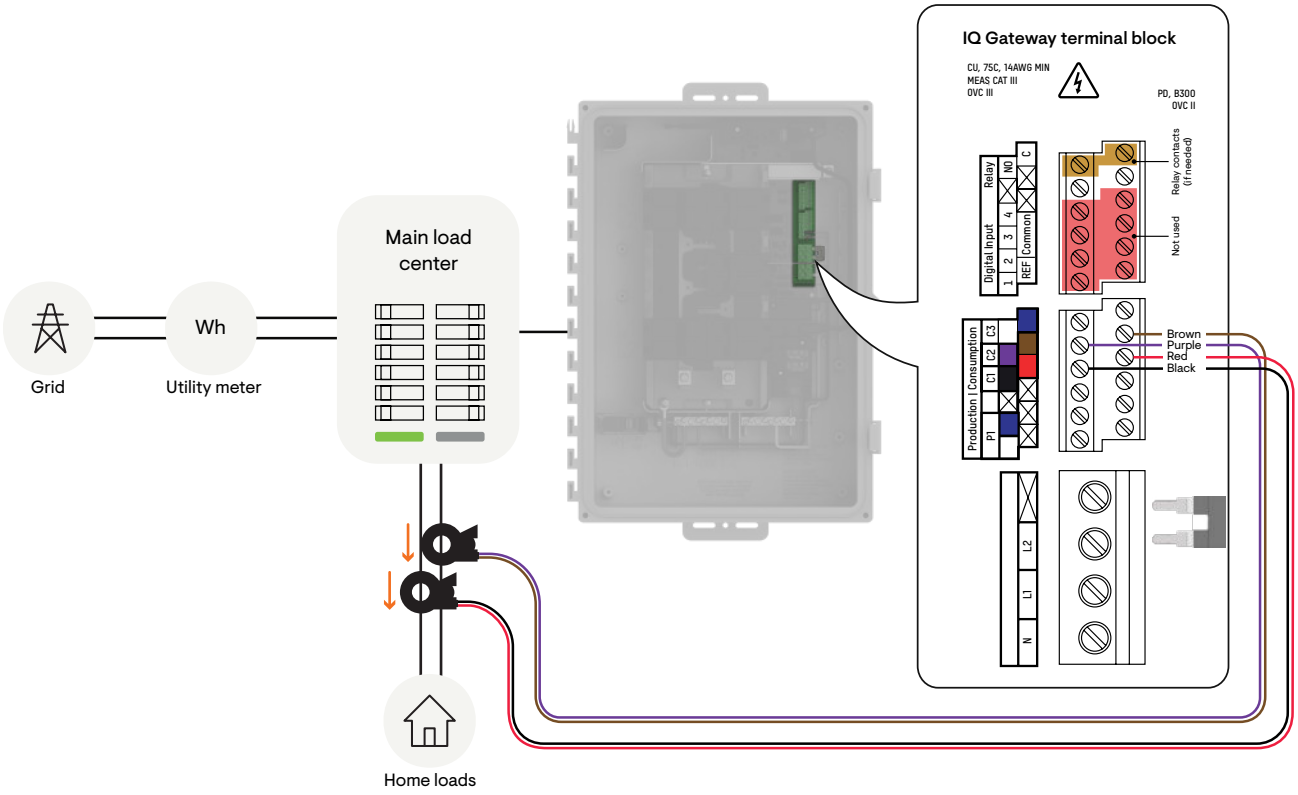

NOTE: Load-only configuration is solely applicable to grid-tied PV-only systems.

WARNING: Risk of electrocution and equipment damage! Do not install CTs when current is flowing in the sensed circuit. Always install CT wires in the terminal blocks before energizing the sensed circuit.

Consumption CT installation in grid-forming systems

Consumption CTs are installed inside the IQ System Controller 3/3G for grid-forming systems.

Clamp the red and black C1 CT on the load center feed wire Line 1 (matching the IQ Gateway's **L1** voltage terminal) with the CT arrow pointing toward the load (away from the grid).

Clamp the purple and brown C2 CT on the load center feed wire Line 2 (matching the IQ Gateway's **L2** voltage terminal) with the CT arrow pointing toward the load (away from the grid).

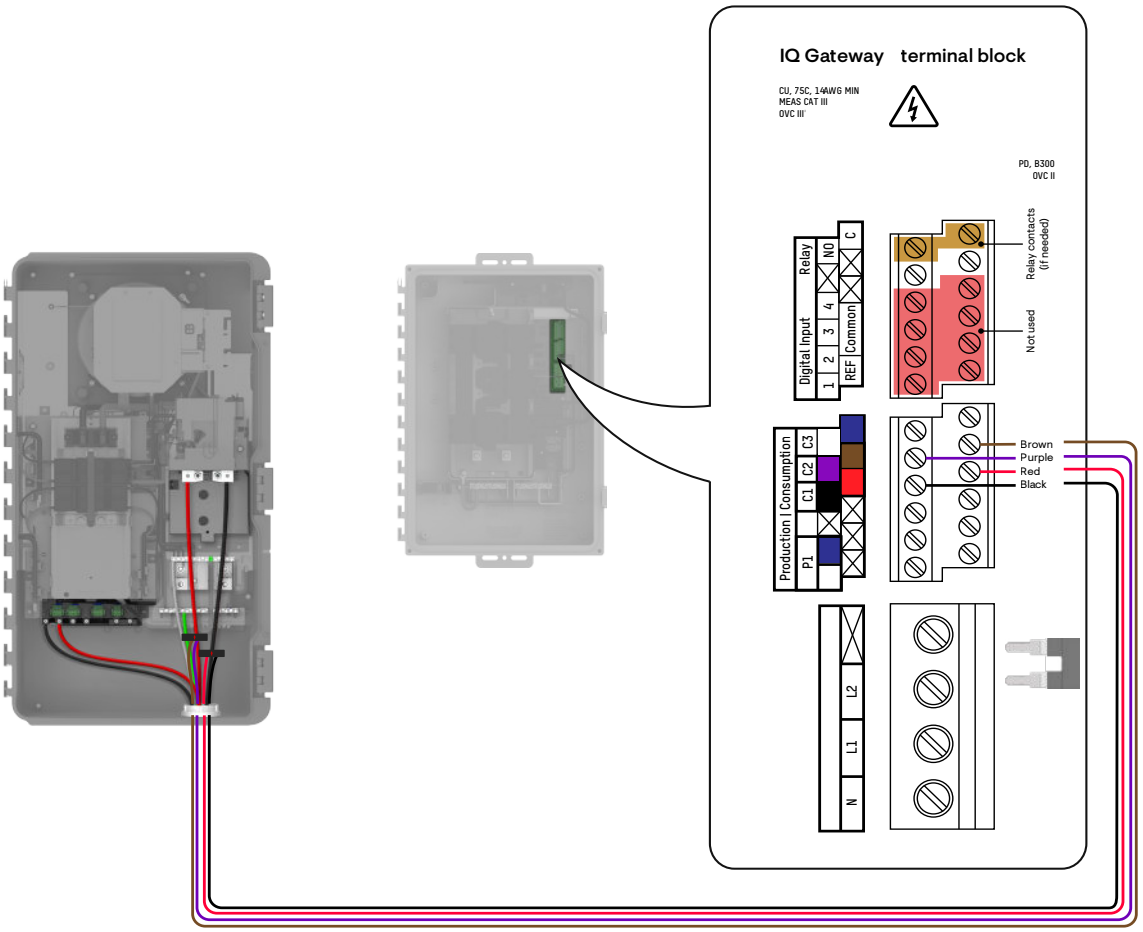

WARNING: Risk of electrocution and equipment damage! Do not install CTs when current is flowing in the sensed circuit. Always install CT wires in the terminal blocks before energizing the sensed circuit.

IQ Battery 5P metering for grid-tied systems

For grid-tied sites, IQ Battery 5P can be installed in the IQ Combiner 5/5C.

The IQ Battery CT needs to be installed on the L2 line of the IQ Battery with the arrow pointing towards the breaker in the IQ Combiner 5/5C.

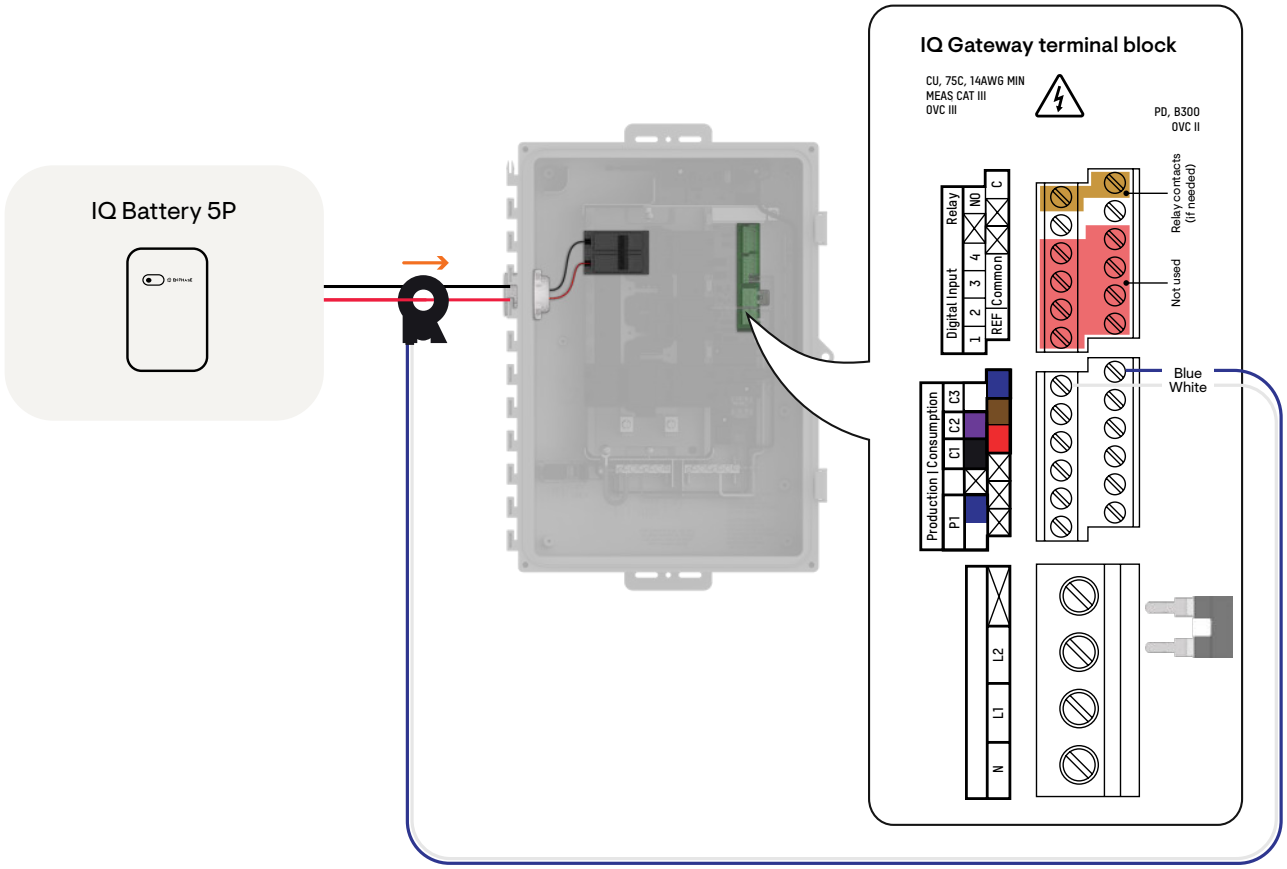

WARNING: Risk of electrocution and equipment damage! Do not install CTs when current is flowing in the sensed circuit. Always install CT wires in the terminal blocks before energizing the sensed circuit.

Section D - Installing the current transformers

IQ Battery 5P metering for grid-forming systems

For grid-forming systems, IQ Battery 5P needs to be installed in the IQ System Controller 3/3G.

The IQ Battery CT needs to be installed on the L2 line of the IQ Battery with the arrow pointing towards the battery lugs in the IQ System Controller.

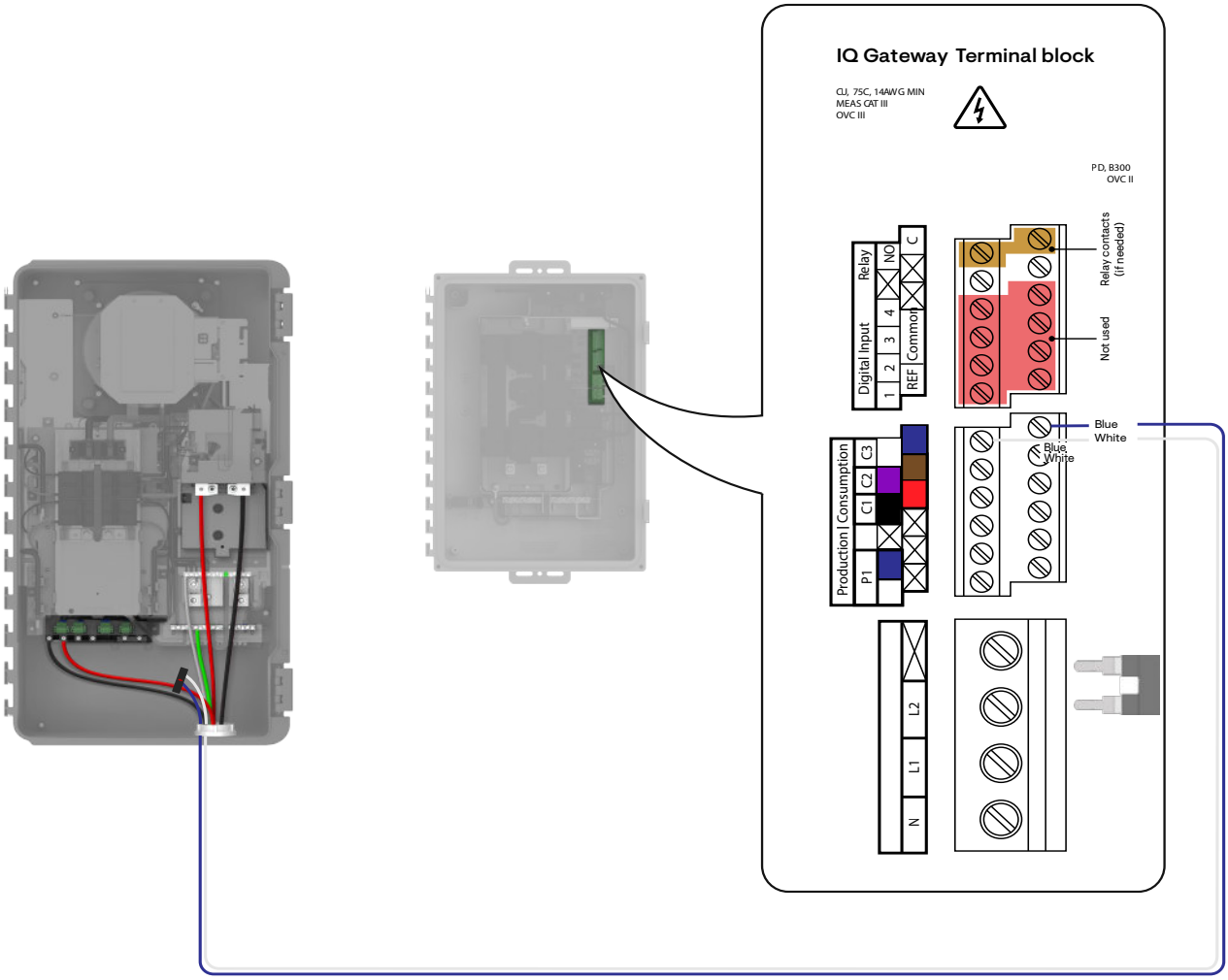

WARNING: Risk of electrocution and equipment damage! Do not install CTs when current is flowing in the sensed circuit. Always install CT wires in the terminal blocks before energizing the sensed circuit.

Section E

Close and energize the IQ Combiner

Closing the IQ Combiner

1. Re-install the plastic dead front with the Mobile Connect installed on the dead front. Do not completely tighten all the screws.
2. Once all screws are partially tightened, go back and tighten each one completely.
3. Plug the Mobile Connect USB cable into the IQ Gateway USB port.
4. Turn off the DER breaker(s).
5. Reinstall the IQ Combiner door.

Energizing the IQ Combiner

1. Turn on the circuit feeding the IQ Combiner 5/5C.
2. Log into the Enphase Installer App on your mobile device and ensure the latest version of IQ Gateway software is available.
3. On the IQ Gateway (inside the combiner), if the AP mode LED is not lit, press the AP mode button.
4. On your mobile device, go to **Settings** and join the Wi-Fi network **IQ Gateway_nnnnnn** (where “nnnnnn” equals the final six digits of the IQ Gateway serial number).
5. For a short period (5-10 minutes), you must keep your mobile device near the IQ Combiner. Follow the on-screen instructions while the update takes place.

NOTE: During the software update, the LEDs on the IQ Gateway flash green one at a time from right to left. During this time, the IQ Gateway will reboot multiple times. All four LEDs flash red when the IQ Gateway reboots.

6. Once the update is finished and the PV system is installed, the IQ Gateway is ready for site commissioning.

NOTE: All four LEDs flash red during boot-up (approximately 3 minutes). When boot-up is complete, the device communications LED turns solid red, indicating that devices are not yet detected.

Section F

Operation

Site commissioning

1. Launch the Enphase Installer App and start System activation.

Launch the Enphase Installer App. Create an activation for a new system, and enter the required information to complete system activation.

2. Add Devices and Arrays to the system.

This step is used to enter the unique serial numbers of all devices present on-site. It is recommended that you enter the serial number by scanning the barcode/QR code.

- Tap **Devices & Array** on the home page.
- Add the total number of devices to be installed in your system.
- Scan device serial numbers using a bar code or QR code in the respective device sections. Use your device's camera to scan serial numbers or enter the serial numbers manually. Manual entry should be used only when you are not able to scan the bar code or QR code of any device.
- After scanning microinverters, you can use Array Builder to assign your scanned microinverters to an array or build an array manually. This step can be completed post-commissioning as well.

3. Setting site configuration and tariff settings.

Go through the Enphase Installer App flow to set up site configuration and tariff settings. For grid-forming systems, site configurations enable selecting the backup type, setting EPC limits, and configuring auxiliary contacts on the IQ System Controller.

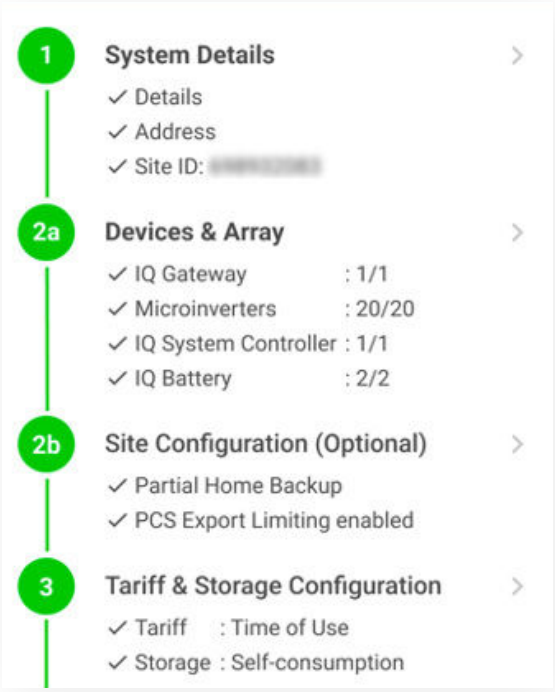

Section F - Operation

4. IQ Gateway connectivity and device provisioning.

This step is used to establish/monitor IQ Gateway connectivity to the Enphase Cloud and to the Enphase Installer App. You can also update IQ Gateway in this step if it's needed for successful commissioning.

Once the gateway connectivity is established, device provisioning is started. The Enphase Installer App verifies and updates the grid profile in IQ Gateway and provisions all the connected devices.

NOTE: If the **IQ Gateway** and the **Enphase Installer App** (or the phone icon) are not connected, press the AP mode button (first button from left) on the IQ Gateway. The LED will light solid green. Go to your phone's settings and connect to IQ Gateway's Wi-Fi network. Return to the Enphase Installer App **IQ Gateway Connectivity** page and connect.

NOTE: If the **IQ Gateway** and **Enphase Cloud** (or the cloud icon) are not connected:

- If Wi-Fi is selected, input the username and password for the home/office Wi-Fi.
- If connecting using Ethernet, ensure the Ethernet cable is plugged into the IQ Gateway.

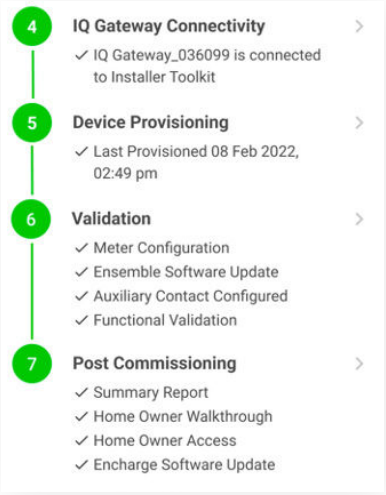

5. Site Validation.

Go through the validation wizard to validate that the system has been correctly commissioned. This section includes the meter configuration wizard that needs to be completed to set up production, consumption, and storage metering on-site.

6. Send Summary Report and complete Home Owner Walk-through.

Open the **Home Owner Walkthrough** and discuss all listed points with the homeowner. Generate the system summary report and share it with the homeowner.

Section F - Operation

IQ Gateway LED information

The IQ Gateway has four LEDs. The LEDs provide critical information about site health. The status of LEDs helps troubleshoot any issues during site commissioning or after the site is operational.

LEDs on IQ Gateway

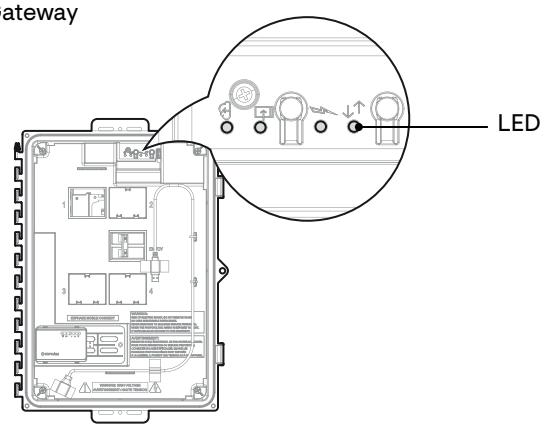

LED	ICON	PURPOSE	STATE	DESCRIPTION
Network communication LED		Information about internet connectivity and connection to the Enphase Cloud	Solid green	Connected to the Enphase Cloud
			Flashing green	Connecting to Enphase or Wi-Fi router
			Red	Only connected to the local network, that is, no internet
			Off	No network available
AP mode LED		Status of AP mode	Green	AP mode is enabled, and the IQ Gateway Wi-Fi network is available
			Off	AP mode is disabled
Power production LED		Information on power production by the microinverters	Green	All communicating microinverters are producing
			Flashing green	Microinverter upgrade in progress
			Red	At least one microinverter is not producing or third-party PV system
			Off	Microinverters are not communicating (low light or nighttime)
Device communications LED		Information on communication between IQ Gateway and microinverters	Solid green	All microinverters are communicating
			Flashing green	Device scan in progress
			Solid red	At least one device is not communicating
			Off	Devices are not communicating (low light or nighttime)
All			Flashing red in unison	The IQ Gateway is booting up
			Flashing green sequentially	Software update is in progress

IQ Gateway push buttons

IQ Gateway has two push buttons. These are only meant for use by installers during installation or to configure the system.

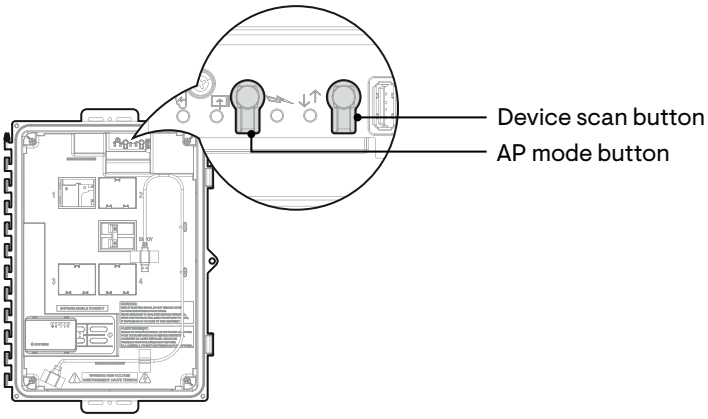

1. AP mode button: Pressing this button starts the IQ Gateway's wireless access point (AP) to connect a mobile phone directly to the IQ Gateway.

2. Device scan button: Pressing this button starts/stops a 15-minute scan to detect microinverters over the power line.

Setting up Enphase Power Control (EPC)

Introduction to Enphase's Power Control (EPC)

The Enphase Energy System supports four Enphase Power Control (EPC) use cases:

1. Main panel upgrade (MPU) avoidance mode with PV current limiting: This feature, applicable in a partial home backup and a grid-tied PV-only scenario, limits the current backfeed into the main panel and removes the need to upgrade the main panel, reducing costs for the homeowner and effort for the installer. The National Electrical Code (NEC) 2020 705.12 allows back feed of current from solar/storage into the main panel subject to the following limit:

   Backfeed allowed <=((120% of busbar rating) – Ampacity of the overcurrent protection device protecting the busbar)/125%

2. IQ Battery oversubscription mode: This feature limits the charge/discharge current and enables more battery capacity to be installed in grid-tied systems. The feature ensures that the total continuous output current from the batteries does not exceed 80% of the battery breaker rating.

3. Aggregate power export limit: This feature ensures that the aggregate power exported to the grid is limited to the aggregate power export limit (PEL) defined by the installer.

4. Battery import/export only mode: The battery import-only feature ensures the Enphase IQ Battery never exports any power to the grid. The battery export-only feature ensures that the Enphase IQ Battery never imports any power from the grid but can export to the grid. Enphase IQ Battery can operate either in battery import-only mode or battery export-only mode.

#	IQ SYSTEM CONTROLLER SKU	PRODUCT NAME	MAXIMUM NO. OF IQ BATTERY 5P	MAX ENERGY (KWH)	MAX POWER (KW)
1	SC200D111C240US01	IQ System Controller 3	16*	80 kWh	30.72 kW
2	SC200G111C240US01	IQ System Controller 3G	8	40 kWh	15.36 kW

* Maximum of eight each on IQ Battery port and additional IQ Battery port.

Setting up Enphase Power Control on-site during commissioning

1. Ensure availability of the following Enphase products, as required, on-site to implement EPC:

PRODUCT	SKU
IQ System Controller 3/3G	SC200D111C240US01, SC200G111C240US01
IQ Combiner 5/5C	X-IQ-AM1-240-5 or X-IQ-AM1-240-5C or X-IQ-AM1-240-5-HDK or X-IQ-AM1-240-5C-HDK
IQ Battery 5P	IQBATTERY-5P-1P-NA
Microinverters	IQ8 Series

2. Installation of the CTs
   Based on the type of system (grid-forming or grid-tied) and the EPC feature being enabled, the CTs may have to be installed in different locations on a site.

CT TYPE	QUANTITY	LOCATION	CONDUCTOR MEASURED	DIRECTION OF ARROW
Consumption CT	2	IQ System Controller	Conductor from the mains breaker to the main panel or the utility meter	Towards the mains breaker inside the IQ System Controller 3/3G
Production CT*	1	IQ Combiner 5/5C	L1 of all PV branch circuits	Away from the PV (towards the PV breakers in the IQ Combiner 5/5C)
IQ Battery CT	1	IQ System Controller	L2 of IQ Battery branch	Away from the IQ Battery (towards the battery lugs on the IQ System Controller)

* IQ Combiner 5/5C has the production pre-wired in the box.

NOTE: If the installer wants generator integration or if the main panel upgrade avoidance feature (applicable in partial home back configurations and grid-tied PV-only systems) is enabled, the Consumption CTs need to be installed between the IQ System Controller 3/3G and the main panel in order to monitor and control the current back-fed from the IQ System Controller to the main panel. Installing the CTs at this location would impact the Aggregate power export limiting (PEL) feature. For further details, refer to the CT installation guidelines tech brief.

Section F - Operation

For grid-forming systems

Whole home backup

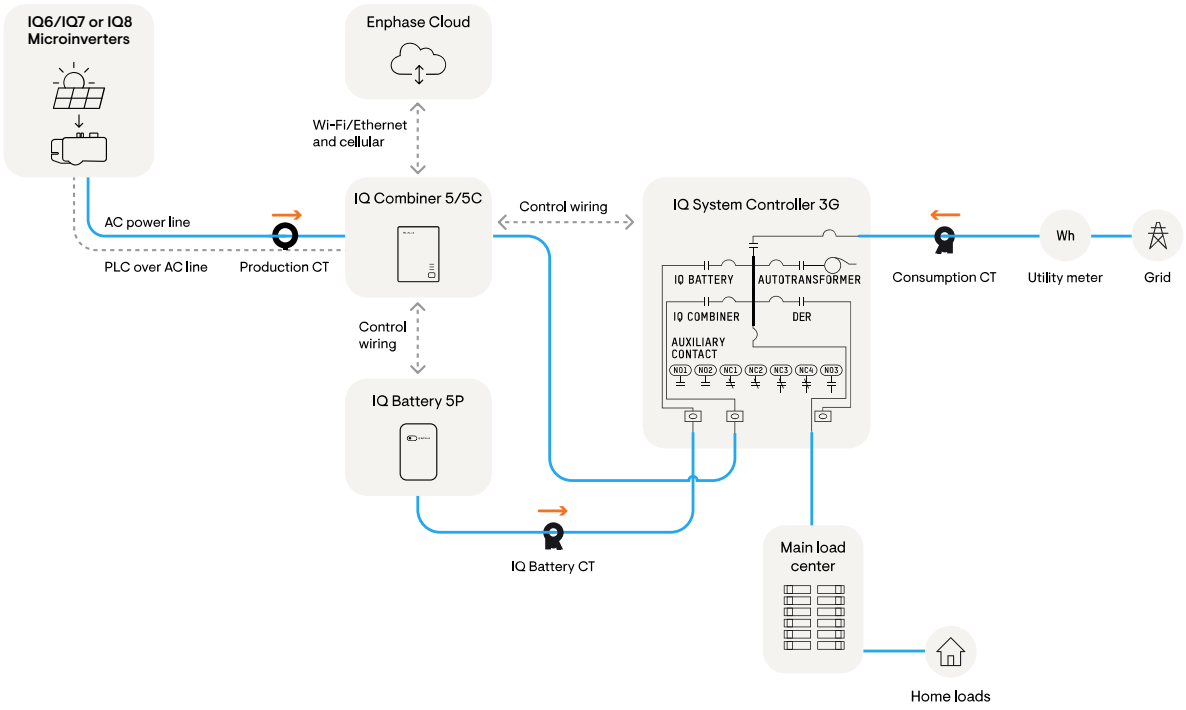

Partial home backup without MPU avoidance

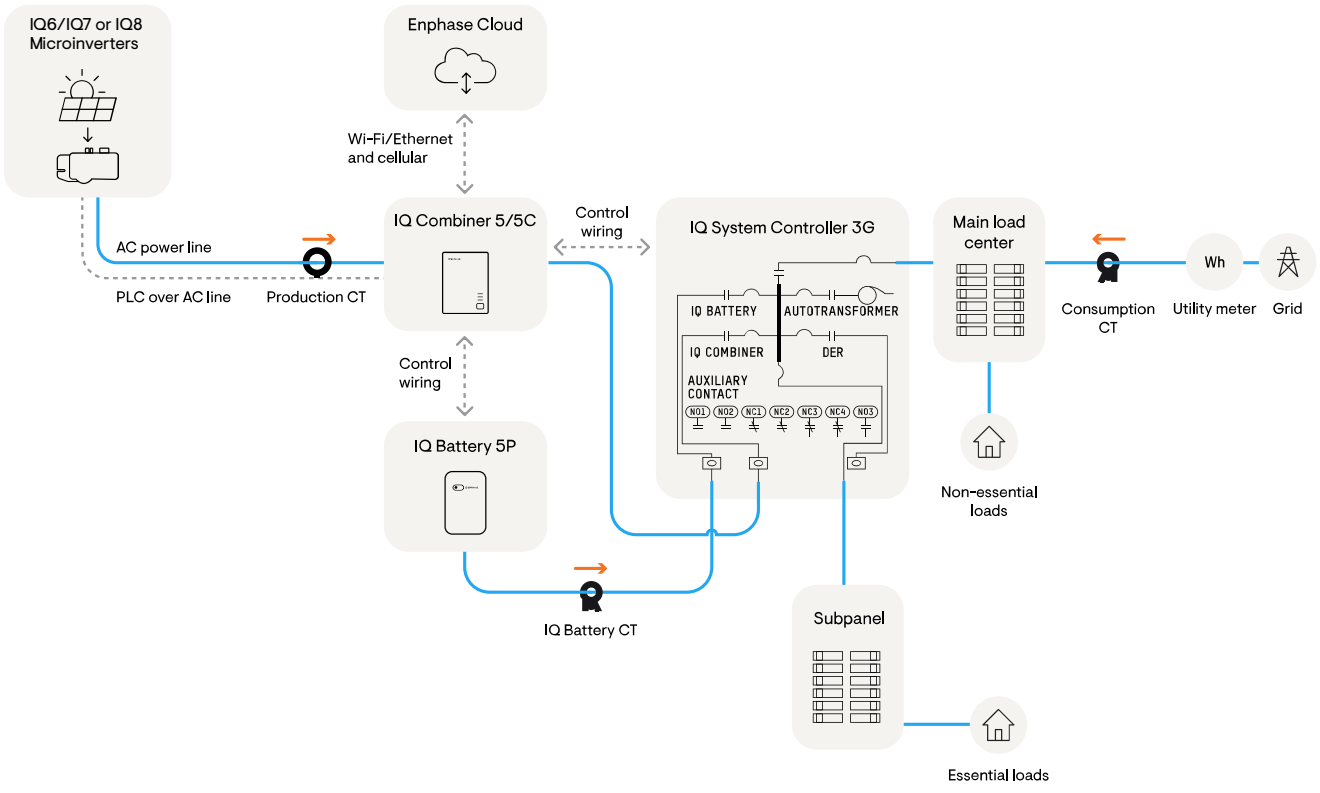

Section F - Operation

Partial home backup with MPU avoidance

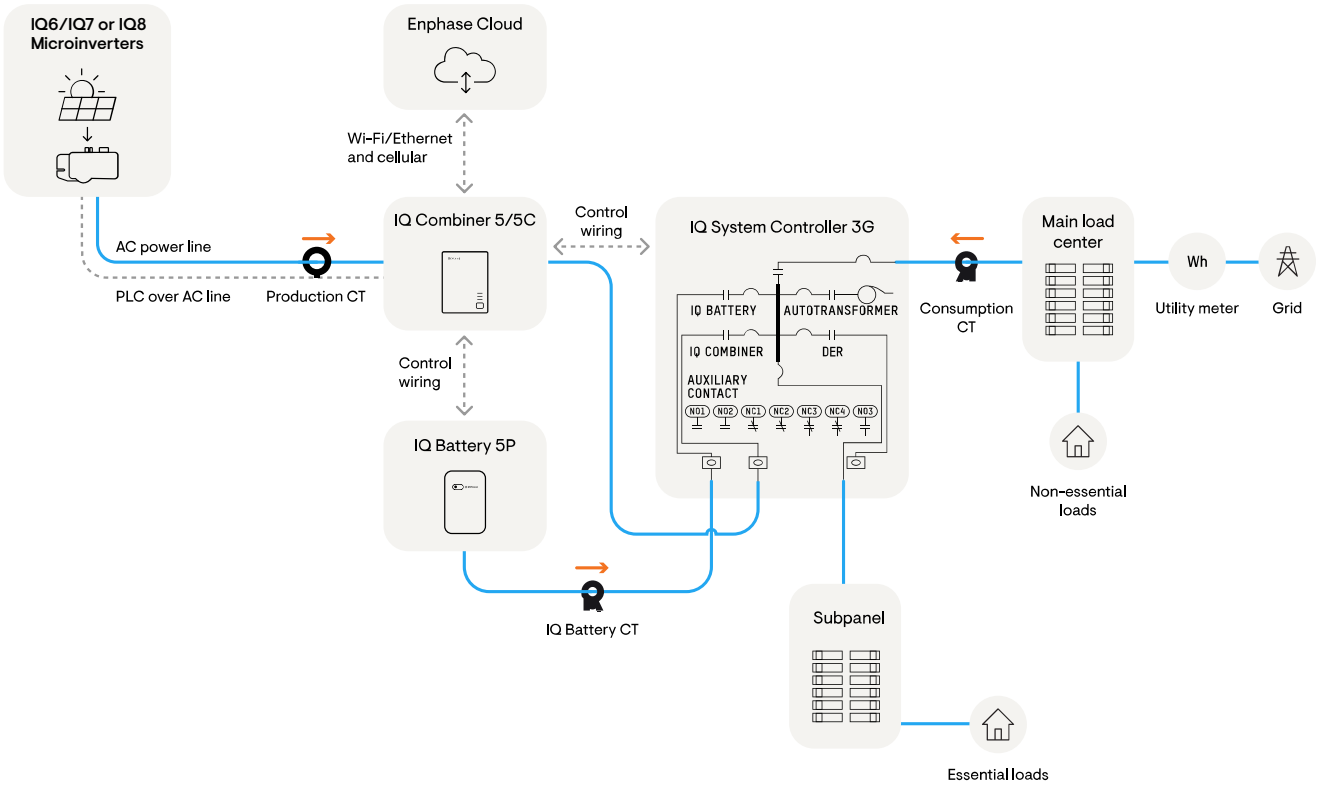

For grid-tied systems

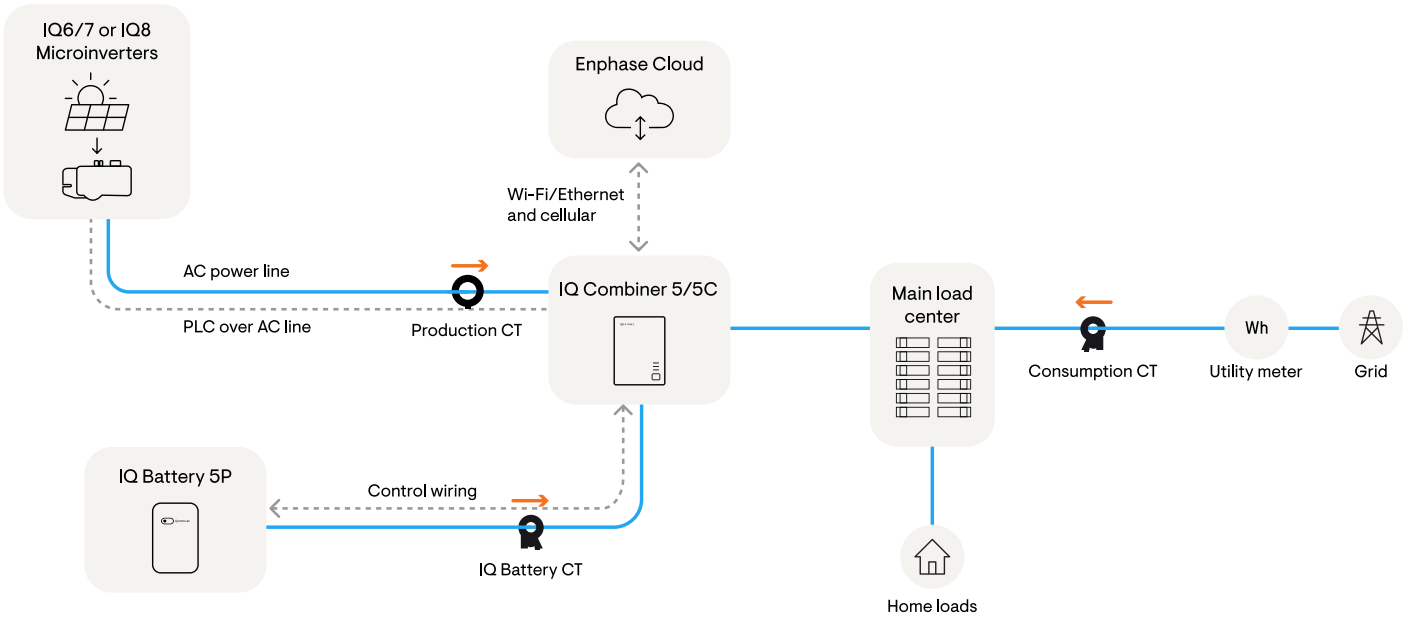

Section F - Operation

CT TYPE	QUANTITY	LOCATION	CONDUCTOR MEASURED	DIRECTION OF ARROW
Consumption CT	2	Main panel	Conductor from the mains breaker to the main panel or the utility meter	Towards the mains breaker in the main panel
Production CT*	1	IQ Combiner 5/5C	L1 of all PV branch circuits	Away from the PV (towards the PV breakers in the IQ Combiner 5/5C)
IQ Battery CT	1	IQ Combiner 5/5C	L2 of IQ Battery branch	Away from the IQ Battery (towards the battery breaker in the IQ Combiner 5/5C)

* IQ Combiner 5/5C has the production pre-wired in the box.

3. Ensure all EPC-controlled busbars and/or conductors are protected with suitably rated overcurrent devices that are appropriately sized for the busbar rating or conductor ampacity.

4. For sites with main panel upgrade (MPU) avoidance mode enabled, indicate, with a label, the maximum current setting for backfeed that is controlled by EPC.

For grid-forming systems, apply the label on the IQ System Controller 3/3G dead front (below the transparent breaker position cover for mains breaker). Record the maximum operating amps value on the label. The label is provided as part of the IQ System Controller Literature kit.

For grid-tied systems, apply the same label on the IQ Combiner 5 dead front (in one of the two recommended positions shown in the image). Record the maximum operating amps value on the label. The label is provided as part of the IQ Combiner 5/5C accessory kit.

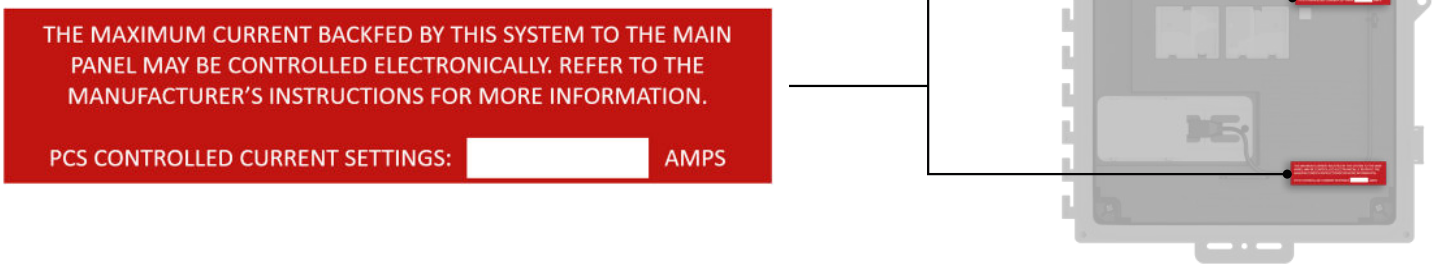

Section F - Operation

5. For sites with Aggregate export power limiting (PEL) enabled, indicate, with a label, the maximum current setting for backfeed from the solar system to the utility service that is controlled by EPC.

For grid-forming systems, apply the label on the IQ System Controller 3/3G dead front (below the transparent breaker position cover for the mains breaker). Record the maximum operating amps value on the label. The label is provided as part of the IQ System Controller Literature kit.

For grid-tied systems, apply the same label on the IQ Combiner 5 dead front (in one of the two recommended positions shown in the image). Record the maximum operating amps value on the label. The label is provided as part of the IQ Combiner 5/5C accessory kit.

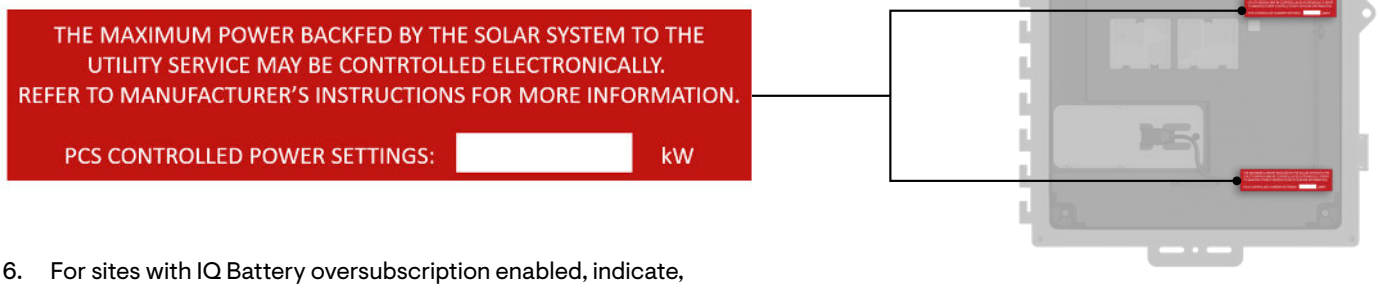

6. For sites with IQ Battery oversubscription enabled, indicate, with a label, the nameplate of the IQ Battery 5P units protected by the breaker on the IQ Combiner or IQ System Controller.

For grid-forming systems, apply the IQ Battery oversubscription label on the IQ System Controller 3/3G dead front (below the transparent breaker positions cover for mains breaker). Record the maximum operating amps value on the label. The label is provided as part of the IQ System Controller Literature kit.

For grid-tied systems, apply the label on the IQ Combiner 5 dead front (to the right of the lower breaker cover slots). The label is provided as part of the IQ Combiner 5/5C accessory kit.

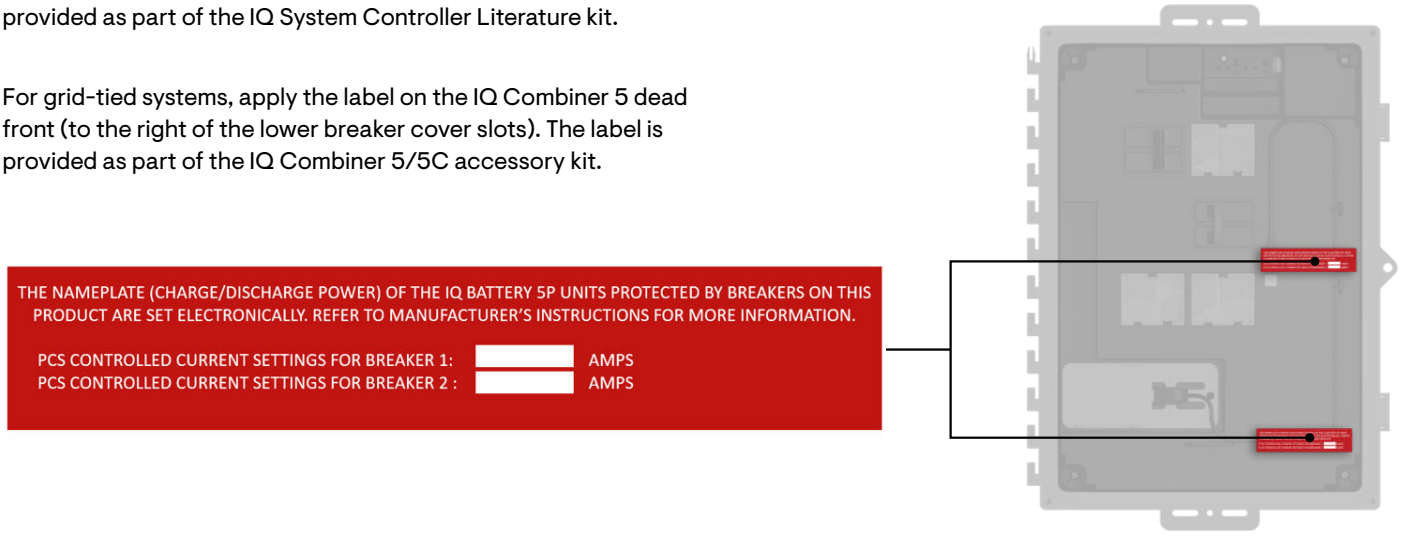

Section F - Operation

7. The IQ Combiner 5/5C accessory kit also includes an EPC label for current transformers (CTs). Use these to apply on the appropriate current transformer that enables the EPC functionality.

SYSTEM TYPE	EPC FEATURE ENABLED	EPC ENABLING CT	LABEL QUANTITY
Grid-tied			
	MPU Avoidance	Production CT	1
	MPU Avoidance	Battery CT	1
	Aggregate Power Export Limiting	Consumption CT	2
	Battery Import Only	Consumption CT	2
	Battery Import Only	Production CT	1
Grid-forming			
	MPU Avoidance	Consumption CT	2
	Aggregate Power Export Limiting	Consumption CT	2
	Battery Import Only	Consumption CT	2
	Battery Import Only	Production CT	1

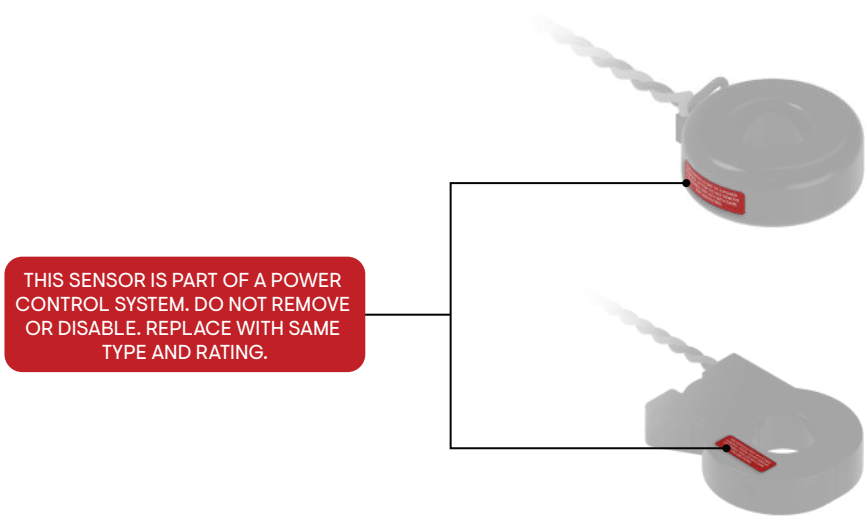

8. Use the site configurations section in the Enphase Installer App to define the EPC settings for the site.

Mobile Connect

The IQ Combiner 5/5C paired with the Mobile Connect provides plug-and-play connectivity to the Enphase Installer Platform. The Mobile Connect is preconfigured for data service and becomes activated when connected to a powered IQ Combiner 5/5C.

The IQ Gateway collects module-level and system-level production data, consumption data, and, if configured, IQ Battery data at predefined periods of time, typically at 15-minute intervals. The report setting for an IQ Combiner with Mobile Connect is low bandwidth mode, which transmits data to the Enphase App four times a day. After transmission, the data may take several minutes to display in the Enphase Installer Platform.

Regulatory notices

FCC statement

This equipment has been tested and found to comply with the limits for a Class B digital device, pursuant to part 15 of the FCC Rules. These limits are designed to provide reasonable protection against harmful interference in a residential installation. This equipment generates, uses, and can radiate radio frequency energy and, if not installed and used in accordance with the instructions, may cause harmful interference to radio communications. However, there is no guarantee that interference will not occur in a particular installation. If this equipment does cause harmful interference to radio or television reception, which can be determined by turning the equipment off and on, you are encouraged to try to correct the interference by one or more of the following measures:

- Reorient or relocate the cellular modem.
- Increase the separation between the equipment and the receiver.
- Connect the equipment to an outlet on a circuit different from that to which the receiver is connected.
- Contact Enphase Support for assistance (https://enphase.com/contact/support). Changes or modifications not expressly approved by the party responsible for compliance may void the user's authority to operate the equipment. This Class B digital apparatus complies with industry Canada ICES-003.

Checking the cellular modem status LEDs

The modem has the following status LEDs. The LEDs are located on the upper right side of the front panel, as shown in the below diagram:

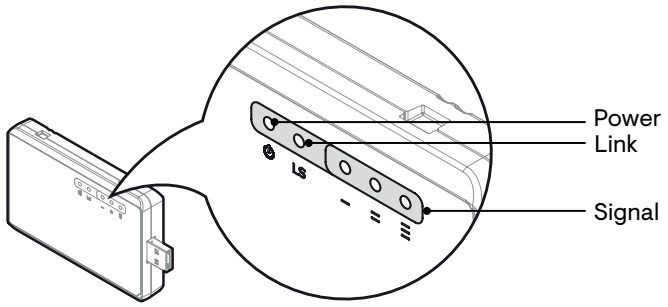

The following tables list the LED indicator status. The LEDs may be difficult to see if you view them from an angle. View the LEDs from the front for a clear view of the LED color.

POWER LED	INDICATES
Off	DC power is not present
On	DC power present

LINK LED	INDICATES
Flashing slowly (200 ms high/200 ms low)	Searching for available network
Flashing slowly (1,800 ms high/200 ms low)	Idle
Flashing quickly (125 ms high/125 ms low)	Data transfer in progress

SIGNAL LEDS	DESCRIPTION	INDICATES
	All off	Very weak signal
	Bar 1 ON	Weak signal
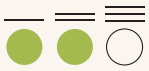	Bar 1 and 2 ON	Good signal
	Bar 1, 2, and 3 ON	Very good signal

Troubleshooting

Contact Enphase Support (https://enphase.com/contact/support) if you have any questions about troubleshooting your system. The LEDs on the IQ Gateway provide guidance for troubleshooting issues on a site. Refer to the IQ Gateway LED Information to understand the LED status codes (add a link to the LED info page).

The section below lists the common issues seen on-site, their resolutions, and how to debug these using the LED signals.

Enphase Installer Platform (EIP) communication LED is red or off.

CAUSE	RESOLUTION	CONNECTION TYPE
Broadband router at home has been replaced	Configure the IQ Gateway Wi-Fi settings for the new wireless network name (SSID) and password	Ethernet, Wi-Fi
Broadband router or DHCP server issues	1. Verify other devices on site can connect to the router 2. Contact your Internet Service Provider or refer to your router documentation for help 3. Check that you are using a broadband router and not a switch or a hub. Many hubs and switches cannot provide a DHCP lease and may not allow the IQ Gateway to connect to the web	Ethernet, Wi-Fi
Unable to connect to a new broadband router	Set up the new Wi-Fi configuration in the Enphase Installer App 1. Select **Wi-Fi** 2. Select **Connect Other Network** 3. Enter the new Wireless Network Name (ESSID) and security code	Ethernet, Wi-Fi
Wi-Fi range issue	Relocate the IQ Gateway to be closer to your router or access point, or add a wireless repeater to extend the network range	Wi-Fi
Ethernet cable improperly connected/ unplugged from the gateway or router	Try plugging out and plugging in the Ethernet cable. Reboot the router and gateway. If the problem persists, use a new Ethernet (CAT5) cable	Ethernet
Mobile Connect is not working	1. Unplug the modem USB cable 2. Power cycle the IQ Gateway and wait until IQ Gateway completely restarts 3. Re-connect the cellular modem USB cable 4. Allow two minutes between any extraction and insertion of the modem cable in the USB port of the cellular modem	Mobile Connect
General troubleshooting for internet connectivity issues	1. Power down all units in the chain, applying power again in this order: 1) modem, 2) router, and 3) IQ Gateway. Allow a few minutes for the IP address to be reassigned 2. Use the Enphase Installer App to get a new IP address, and then allow 30 to 60 seconds for the network communications LED to turn solid green	Ethernet/Wi-Fi/Mobile Connect

Troubleshooting

AP mode LED is red or off

If the AP mode button is pressed, and the IQ Gateway's network does not show under the list of available networks, then follow these steps:

1. Press the button
2. Power cycle the IQ Gateway

If the LED is still red or off, contact Enphase Support.

Power production LED is red or off

CAUSE	RESOLUTION
If all the non-productive microinverters are on the same branch, it could be an issue with the junction box of a PV branch	Check the breaker and wiring starting at the junction box for the affected branch
If only one or few scattered microinverters are not producing power, it could be due to improper wiring	Verify that the AC connectors are fully seated in the Engage Cable connectors. Also, check that each module is meeting the required start-up voltage for the microinverter (usually 22 V). A PV module that is failing or that is undersized may not generate enough power for AC conversion
Grid fluctuations or mains wiring issue	Verify that there is proper input voltage and frequency from the grid. Next, check the breaker and wiring starting at the load center

Device communications LED is red or off

CAUSE	RESOLUTION
The IQ Gateway may be having difficulty communicating over the power lines	1. Check the Enphase Installer App mobile app to see which microinverters are not communicating 2. Check that the circuit breaker(s) for the PV array are in the ON position and that the PV modules are connected to the microinverters 3. Verify the PV module DC voltage is within the allowable range for the microinverter
PV modules may not be generating power	Check that the circuit breaker(s) for the PV array are in the ON position and that the PV modules are connected to the microinverters
IQ Gateway may not be in the correct position	If the signal strength is poor, for a grid-tied system, power the IQ Combiner from a circuit close to the solar production circuit and close to the AC mains

NOTE: Device communications LED may remain red or off in low-light conditions. In such a scenario, wait for conditions to improve and then try again.

All LEDs are red or off

CAUSE	RESOLUTION
The IQ Gateway is not powered or is incorrectly powered	Ensure IQ Gateway is properly powered from its breaker (in the IQ Combiner for grid-tied systems or the quad breaker in the IQ System Controller for grid-agnostic systems
Phases may not be balanced	Measure the conductors and neutral line to verify that the phases are balanced

Safety (all models)

IMPORTANT SAFETY INSTRUCTIONS. SAVE THESE INSTRUCTIONS.
Follow these important instructions during the installation and maintenance of the IQ Combiner 5/5C.

Safety and advisory symbols

DANGER: This indicates a hazardous situation, which, if not avoided, will result in death or serious injury.

WARNING: This indicates a situation where failure to follow instructions may be a safety hazard or cause equipment malfunction. Use extreme caution and follow instructions carefully.

NOTE: This indicates information particularly important for optimal system operation. Follow instructions carefully.

Safety instructions

DANGER: Risk of electric shock. Risk of fire. Do not attempt to repair the IQ Combiner 5/5C; it contains no user-serviceable parts. Tampering with the IQ Combiner 5/5C will void the warranty. If the IQ Combiner 5/5C fails, contact Enphase Support for assistance (https://enphase.com/contact/support).

DANGER: Risk of electrocution! Do not install CTs when current flows in the sensed circuit. Always install CT wires in the terminal blocks before energizing the sensed circuit.

DANGER: Risk of electric shock. Do not use Enphase equipment in a manner not specified by the manufacturer. Doing so may cause death or injury to persons or damage to equipment.

DANGER: Risk of electric shock. Be aware that installation of this equipment includes the risk of electric shock. Do not install the IQ Combiner 5/5C without first removing AC power from the Enphase system. Ensure the power coming from the microinverters is de-energized before servicing or installing.

DANGER: Risk of electric shock. Risk of fire. Only qualified personnel should troubleshoot, install, or replace the IQ Combiner 5/5C.

DANGER: Risk of electric shock. Improper servicing of the IQ Combiner 5/5C or its components may result in a risk of shock, fire, or explosion. To reduce these risks, disconnect all wiring before attempting any maintenance or cleaning.

DANGER: Risk of electric shock. Always de-energize the AC branch circuit before servicing. While connectors are rated for disconnecting under load, it is a best practice to de-energize before disconnecting.

DANGER: Risk of electric shock. Risk of fire. Only use electrical system components approved for wet locations.

DANGER: Risk of electric shock. Risk of fire. Ensure that all wiring is correct and that none of the wires are pinched or damaged.

DANGER: Risk of electric shock. Risk of fire. Do not work alone. Someone should be within your range of voice or close enough to come to your aid when you work with or near electrical equipment. Remove rings, bracelets, necklaces, watches, etc., when working with batteries, photovoltaic modules, or other electrical equipment.

DANGER: Risk of electric shock. Risk of fire. Before making any connections, verify that the circuit breaker(s) are in the off position. Double-check all wiring before applying power.

DANGER: Risk of electric shock. Risk of fire. Do not wire unused terminals or terminal blocks on the IQ Combiner 5/5C.

WARNING: Risk of electric shock. To maintain the warranty, do not modify the dead front other than to remove filler plates, as needed.

WARNING: Before installing or using the IQ Combiner 5/5C, read all instructions and cautionary markings in the technical description and on the equipment.

WARNING: Use the circuit breakers in the IQ Combiner 5/5C only for serving Enphase equipment. No other loads are allowed.

Enphase Support: https://enphase.com/contact/support

FCC Statement: This equipment has been tested and found to comply with the limits for a Class B digital device, pursuant to part 15 of the FCC Rules. These limits are designed to provide reasonable protection against harmful interference in a residential installation.

This equipment generates, uses and can radiate radio frequency energy and, if not installed and used in accordance with the instructions, may cause harmful interference to radio communications. However, there is no guarantee that interference will not occur in a particular installation.

If this equipment does cause harmful interference to radio or television reception, which can be determined by turning the equipment off and on, you are encouraged to try to correct the interference by one or more of the following measures:
- Reorient or relocate the receiving antenna.
- Increase the separation between the equipment and the receiver.
- Connect the equipment into an outlet on a circuit different from that to which the receiver is connected.
- Consult the dealer or an experienced radio/TV technician for help.

Changes or modifications not expressly approved by the party responsible for compliance may void the user's authority to operate the equipment.

This Class B digital apparatus complies with Industry Canada ICES-003.

WARNING: This unit is not provided with a GFDI device. This inverter or charge controller must be used with an external GFDI device as required by Article 690 of the National Electrical Code for the installation location.

WARNING: The IQ Combiner 5/5C has a pre-installed heat shield attached to the enclosure door. Do not remove the heat shield.

WARNING: This product is intended for operation in an environment with a maximum ambient temperature of 46°C (115°F).

WARNING: Bonding between conduit connections is not automatic and must be provided as part of the installation.

NOTE: Perform all wiring in accordance with all applicable local electrical codes, with the Canadian Electrical Code, Part I, and with the National Electrical Code (NEC), ANSI/NFPA 70.

NOTE: Protection against lightning and resulting voltage surges must be in accordance with local standards.

NOTE: Using unapproved attachments or accessories could result in damage or injury.

NOTE: Install the IQ Combiner 5/5C in the field with 75°C or higher copper conductors sized per local code requirements and voltage drop/rise considerations.

NOTE: Use Class 1 wiring methods for field wiring connections to terminals of a Class 2 circuit. Use 14 to 6 AWG wires for branch circuits and 14 to 3 AWG for output circuits. Select the wire gauge used based on the protection provided by the circuit breaker(s)/fuses. Overcurrent protection must be installed as part of the system installation.

NOTE: To ensure optimal reliability and to meet warranty requirements, the IQ Combiner 5C and/or IQ Combiner 5 must be installed according to the instructions in this guide.

Environmental protection



ELECTRONIC DEVICE: DO NOT THROW AWAY. Waste electrical products should not be disposed of with household waste. Refer to your local codes for disposal requirements.

Revision history

REVISION	DATE	DESCRIPTION
140-00254-12	April 2026	Added a note with LATAM and Caribbean regions.

Previous releases.

Installer notes

IQC-5-5C-QIG-140-00254-12-EN-LAC-2026-04-21

© 2026 Enphase Energy. All rights reserved. Enphase, the e and CC logos, IQ, and certain other marks listed at https://enphase.com/trademark-usage-guidelines are trademarks of Enphase Energy, Inc. in the U.S. and other countries. Data subject to change.

ENPHASE