ENPHASE

ENGLISH

IQ Combiner 6C

Quick install guide



X-IQ-AM1-240-6C

VERSION 5.0
JULY 2026

140-00248-05

This page is left blank intentionally.

Contents

1. Introduction 6

2. What's in the box 6

3. Tools/Additional items required 7

4. Mounting 8

4.1. Location planning 8

4.2. Recommended clearance 8

4.3. Opening the door 9

4.4. Detaching the door 10

4.5. Removing the dead front 10

4.6. Install on the wall 11

5. Enclosure internals 12

6. Conduit drilling 13

6.1. Upper-side conduit (pre-drilled) 14

6.1.1. Wiring using upper-side conduit (pre-drilled) 15

6.1.2. Prevent water ingress through conduits 16

6.2. Dimensions for the conduit drilling zone 17

7. Wiring sequence 18

8. Ride-through power-supply board 19

8.1. Integrated load controller: Disassembly 19

8.2. Power supply board with capacitors: Assembly 20

9. Control wiring 21

9.1. Sequence 1: Control wiring between one IQ Battery 10C, IQ Combiner 6C, and IQ Meter Collar 23

9.2. Sequence 2: Control wiring between two IQ Battery 10C, IQ Combiner 6C, and IQ Meter Collar 24

9.3. Sequence 3: Control wiring between four IQ Battery 10C, IQ Combiner 6C, and IQ Meter Collar 26

9.4. Sequence 4: Control wiring between four IQ Battery 10C, IQ Combiner 6C, without the IQ Meter Collar 27

9.5. Sequence 5: Control wiring between four IQ Battery 10C units using one header in IQ Combiner 6C 28

10. Consumption CTs wiring 28

10.1. Method 1: Wire Consumption CTs on the load controller CT position 29

10.2. Method 1a: Parallel Consumption CTs 31

10.3. Method 2: Parallel Consumption CTs and external CTs 33

11. Gateway and combiner controller board connections 36

11.1. IQ Gateway connections 36

12. Wiring 37

12.1. IQ PV wiring 37

12.2. IQ Battery wiring 39

12.3. IQ EV Charger wiring 39

12.4. Integrated load controller wiring 40

12.5. Backfeed wiring 41

12.6. Auxiliary relays wiring 42

12.7. Third party or Enphase additional/legacy PV wiring 43

12.8. Disconnect and rapid shutdown initiator wiring 43

12.8.1. Grid-side disconnect 44

12.8.2. PV disconnect in line with the PV aggregate breaker 45

12.8.3. PV disconnect in line with external combiner (2-Pole) 46

12.8.4. PV disconnect in line with external combiner (3-Pole) 47

12.8.5. Enphase System Shutdown switch (applicable only for grid-forming - backup systems) 48

13. LEDs and push buttons 50

14. Setting up Enphase Power Control (EPC) 50

14.1. Setting up Enphase Power Control on-site during commissioning 51

15. NEC and utility-compliant disconnect options 52

15.1. Compliance matrix: Grid-tied (non-backup) system 53

15.2. **Compliance matrix: Grid-forming (backup) system** 53

15.3. 3-pole disconnect models 54

15.4. 2-pole disconnect models 54

16. Closing the enclosure 55

17. Energizing the IQ Combiner 6C 55

18. Site commissioning 55

19. Safety information 56

19.1. Safety and advisory symbols 56

19.2. Safety instructions 56

19.3. FCC statement 56

20. Appendix A Legends 57

21. Appendix B Installation of production meter/external DER meter 57

22. Appendix C Multiple Gateway installation guidelines for PLC interference mitigation 59

Contents

23. Appendix D Recommended distance between disconnect and IQ Combiner 6C 60

24. Appendix E System configurations 61

1. Introduction

The IQ Combiner 6C consolidates interconnection equipment into a single enclosure, simplifying the installation of Enphase Energy Systems. It integrates the IQ Gateway installation by providing a consistent, pre-wired solution for residential applications. This all-in-one solution includes breaker spaces for photovoltaic (PV) systems, batteries, EV chargers, and load controllers, along with integrated current transformers (CTs) for solar and battery metering. It also includes integrated CTs for load/legacy microinverters/third-party PV monitoring.

Ordering SKU: X-IQ-AM1-240-6C/X-IQ-AM1-240-6C-3BRK[1]

Model: X-IQ-AM1-240-6C

Compatibility: The IQ Combiner 6C is compatible with IQ6/IQ7 or IQ8 Microinverters, IQ Battery 10C, IQ Meter Collar, and IQ EV Charger. M or S Series Microinverters or non-Enphase solar inverters may be connected only to the integrated load controller space.

Features

- Includes IQ Gateway for communication and control
- Includes Enphase Mobile Connect (CELLMODEM-07-NA)
- Supports flexible networking: Wi-Fi, Ethernet, and cellular
- IQ PV Production metering (revenue grade)
- IQ Battery metering (revenue grade)
- Consumption/load monitoring
- IQ EV Charger monitoring [2]
- Mounts to one stud with centered brackets
- Supports conduit entries from the upper sides (left and right), bottom, lower sides (left and right), and rear
- Spaces to support up to 7 × 2-pole (240 V) branch circuit breakers on PV and DER bus
- Includes integrated load controller to support additional loads/legacy Enphase PV/third-party PV
- Up to 5 × 20 A total IQ PV branch circuits
- Up to 2 × 80 A IQ Battery branch circuits
- Up to 1 × 60 A IQ EV Charger branch circuit
- Up to 1 × 80 A integrated load controller branch circuit
- Includes a pre-installed 60 A PV aggregate breaker as a rapid shutdown device
- Eliminate CT wiring errors
  - Fully integrated Production CT (L2) does not require field wiring and is accurate up to ±0.5%
  - Fully integrated battery CTs (L1, L2) do not require field wiring and are accurate up to ±0.5%
  - Fully integrated backfeed CTs (L1, L2) do not require field wiring and are accurate up to ±2.5%
  - Fully integrated load controller CTs (L1, L2) do not require field wiring and are accurate up to ±2.5%
- Durable NRTL-certified NEMA type 3R enclosure
- 15-year limited warranty
- 2-year labor reimbursement program coverage

NOTE: The IQ Combiner 6C can be used for grid-interactive (i.e., grid-tied) applications. When used in conjunction with an IQ Meter Collar, it enables multi-mode (grid-forming) installations, eliminating the need for the IQ System Controller.

2. What's in the box



IQ Combiner 6C



Quick install guide

Enclosure	IQ Combiner 6C unit

[1] X-IQ-AM1-240-6C-3BRK includes two pre-installed 20 A breakers for PV circuits and one 40 A breaker for the battery circuit.
[2] The IQ EV Charger requires a field-installed CT. The CT must be purchased separately.

Enphase Mobile Connect	Pre-installed CELLMODEM-07-NA cellular modem with a 5-year data plan within the enclosure
Control headers (4×)	Pre-installed control headers with resistors on two of them
Accessory kit	• Quick install guide • Labels • Headers with resistors (2×) • Consumption CT headers • Upper-side conduit plate 1"
PV aggregate breaker	Pre-installed (60 A) UL 489 certified breaker within the enclosure, usable as a rapid shutdown initiator for outdoor installs.
PV and battery breakers	X-IQ-AM1-240-6C-3BRK is shipped with two pre-installed 20 A breakers for PV circuits and one pre-installed 40 A breaker for the battery circuit.

3. Tools/Additional items required



Drill machine



Marker, drill leveling tool

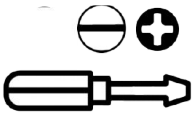

Flat and Phillips head screwdrivers (at least 8" long)



Wire stripper



Measuring tape

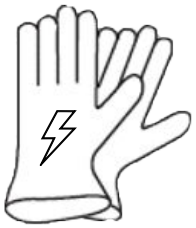

Gloves



Torque wrench

(15-50) lb-in

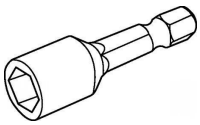

Hex nut driver 7/16"

(Optional for disassembly of the integrated load controller)

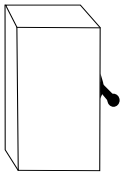

Safety disconnect

(Optional)



Copper conductors: 12-2/0 (rated at 194°F (90°C))



Lag bolts or other screw types with a washer to install the wall bracket on the wall

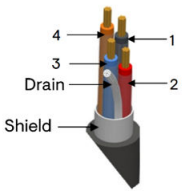

Enphase SKU for control cable:

CTRL-SC3-NA-01



Consumption CTs (optional)

SKU: 1 unit of CT-200-CLAMP-2 A or 2 units of CT-200-CLAMP or 2 units of CT-200-SPLIT

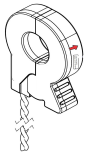

EVSE CTs SKU: CT-200-CLAMP- (optional)

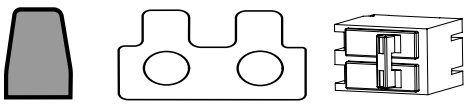

Wire connectors

Appropriately sized breakers[3]

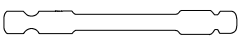

Drill bit extension

[3] X-IQ-AM1-240-6C-3BRK is shipped with two pre-installed 20 A breakers for PV circuits and one pre-installed 40 A breaker for the battery circuit. Additional PV, battery, or EVSE breakers must be purchased separately.

4. Mounting

4.1. Location planning



- The IQ Combiner 6C is NEMA type 3R rated and can be mounted indoors or outdoors.
- Install this product where cables from PV, grid, and IQ Battery are easily accessible and can be wired to the IQ Combiner 6C.





- This product is designed to be installed on a vertical wall only. Do not install it flat on the ground. It must be mounted within 15° vertically.
- The mounting surface must be able to support the weight of the combiner box with wires and conduits attached to it.





- Follow all local standards and regulations during installation.
- The product operates within an ambient temperature range from -40°F to 115°F (-40°C to 46°C).
- For optimal performance, the system should be installed in a location without direct sunlight; however, it is designed to operate even under direct sunlight.
- Extended exposure to direct sunlight at higher ambient temperature conditions may impact the optimal performance of the product.
- Do not install the product in a very dusty environment.



- This product must not be installed at altitudes above 9842 ft (3000 m)[4].
- In flood-prone areas, ensure that the clearance from the ground is sufficient to avoid water ingress.



- The enclosure is suitable for both indoor and outdoor use, designed to endure moisture, rainfall, and harsh environmental conditions. However, avoid installing it directly beneath any downspouts, faucets, or other sources of continuous water flow.

4.2. Recommended clearance

- For outdoor installation, ensure clearance of 914.4 mm (36") from the ground.
- For indoor installation, ensure clearance of 152.4 mm (6") from the ground.
- The IQ Combiner 6C features active cooling with vents; it is recommended to maintain a 152.4 mm (6") distance from the nearest side wall to enhance thermal regulation and facilitate fan filter servicing.
- Follow all local standards and regulations related to the mounting of electrical equipment.

[4] Verify the altitude specifications in each component's data sheet to ensure compatibility with the installation site's altitude. Note that the systems using the IQ Meter Collar are limited to an altitude of 8202 feet (2500 m).

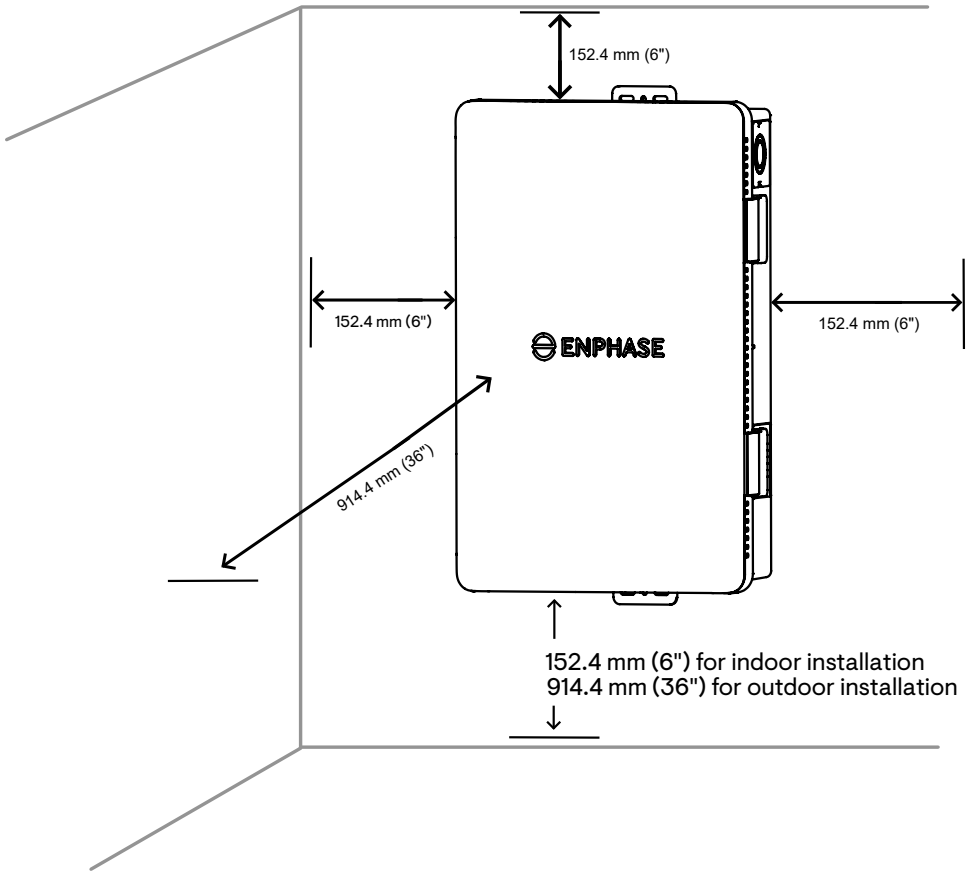

NOTE: Conduits may be placed within the 6-inch clearance zone along the sides and bottom of the enclosure, as long as they do not block the airflow of the fan with the filter.

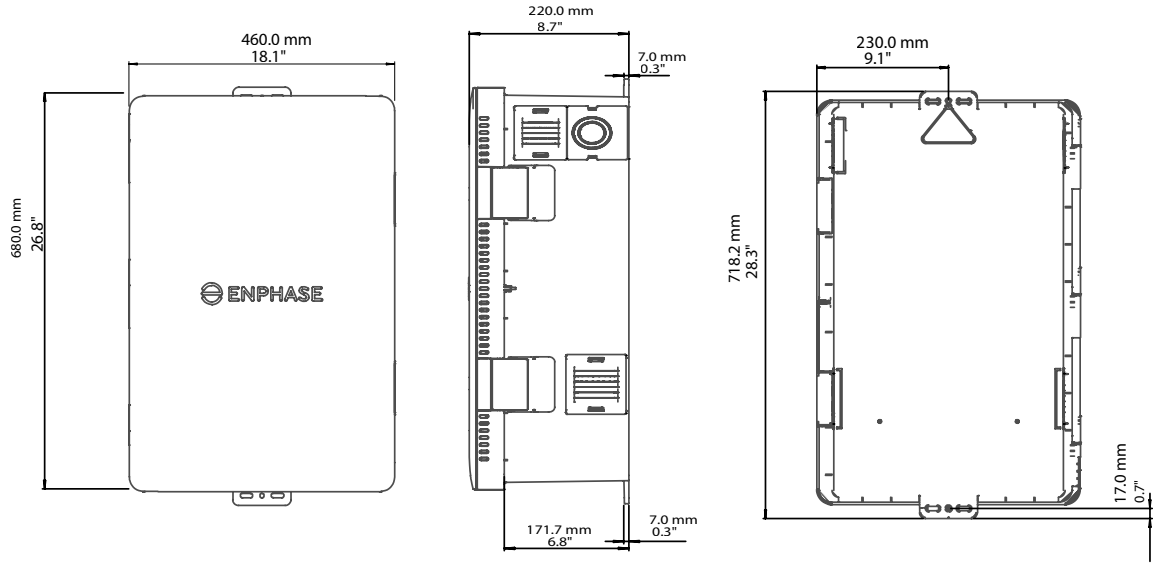

4.3. Opening the door

- The IQ Combiner 6C door is designed to open beyond 180° and rest flat against the wall or on a flat surface used during preparation.
- Installation may be done without door removal.

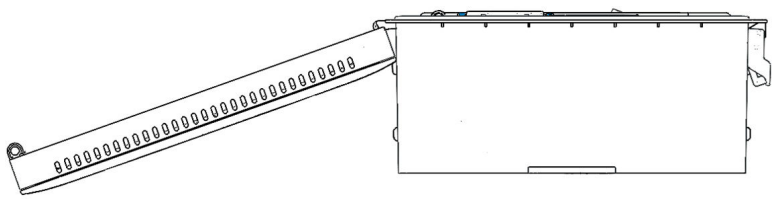

4.4. Detaching the door

Follow these steps:

1. Open the door latch.
2. Open the door between 90° and 120° while facing the enclosure.
3. Slide up the door for removal.
4. Set the door aside to be reattached later.

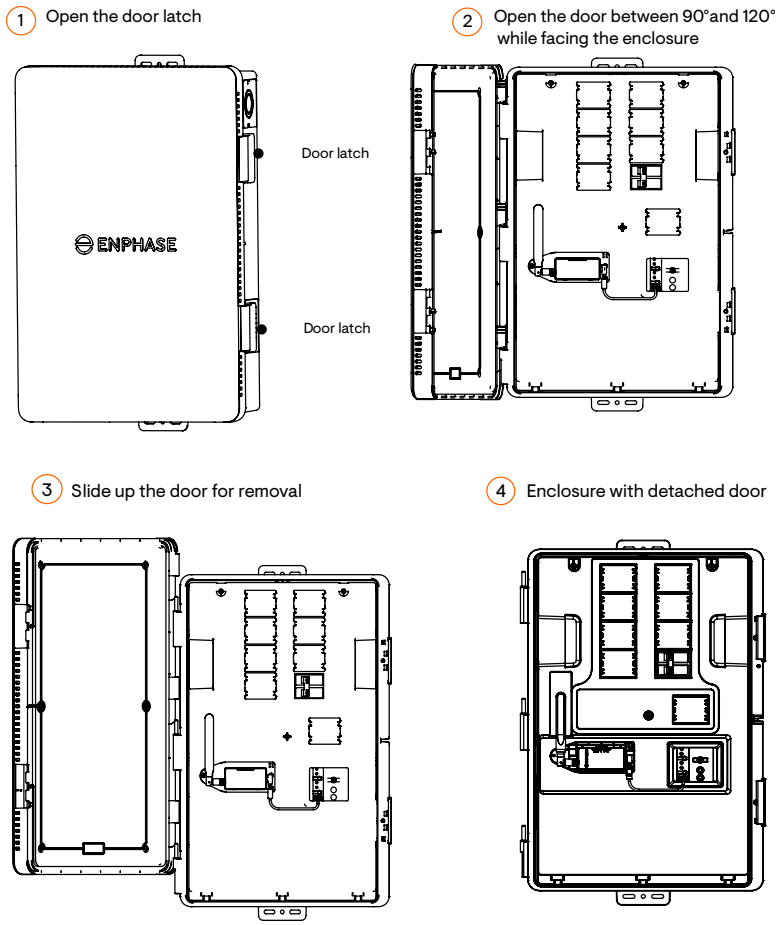

4.5. Removing the dead front

Follow these steps:

1. Unplug the USB connection to Mobile Connect (for IQ Combiner 6C) before removing the dead front. It is not necessary to disassemble the Mobile Connect from the dead front.
2. Unfasten the three fasteners holding the dead front.
   a. For convenience, ensure to unfasten the central fastener before unfastening the top left and top right ones.
3. Gently lift and angle the top section of the dead front away from the enclosure to detach it.

NOTE: To use each breaker position, remove the filler plate from the dead front.

1 Unplug the Mobile Connect USB

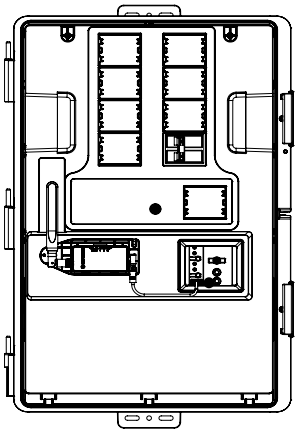

Mobile Connect USB

2 Unfasten the three fasteners holding the dead front

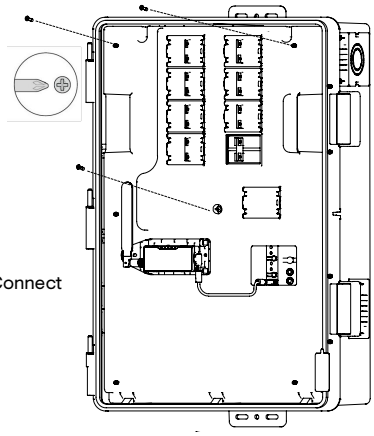

3 Gently lift and angle the top section away from the enclosure to detach it

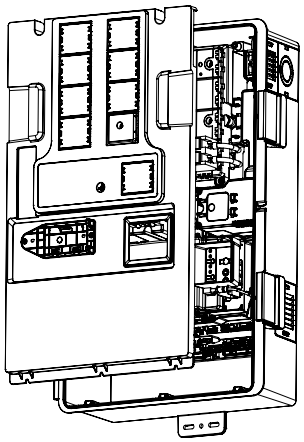

4 Enclosure without dead front

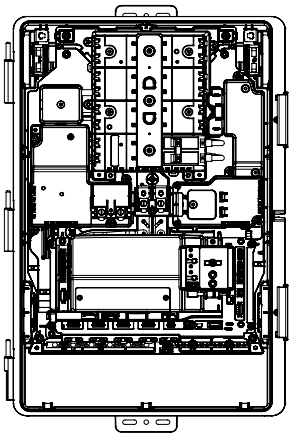

4.6. Install on the wall

Follow these steps:

1. Position the unit on the wall so that the mounting holes in the center of the tabs align with the center of the stud.
   - Mark the top center hole for pre-drilling and set the unit aside safely.
   - Drill at the marked location.
2. Insert the screw in the drilled hole, and use flange head washers between the fastener heads and the wall.
   - Make sure to leave a gap between the screw head and the wall for ease of mounting.
3. Hang the enclosure on the screw.
   - Remove or open the door for ease of mounting.
4. Use a drill leveling tool before marking the bottom drilling hole.
5. Mark the bottom drill location.
   - Drill at the marked location.
   - Insert the screw in the bottom drilled hole, while ensuring the washer is between the unit and the screw head.
6. Once the unit is secured with both the top and bottom screws, tighten the screws to the required torque.

NOTE: Do not lift the unit by the door while mounting.

NOTE: Adhere to local standards for mounting.

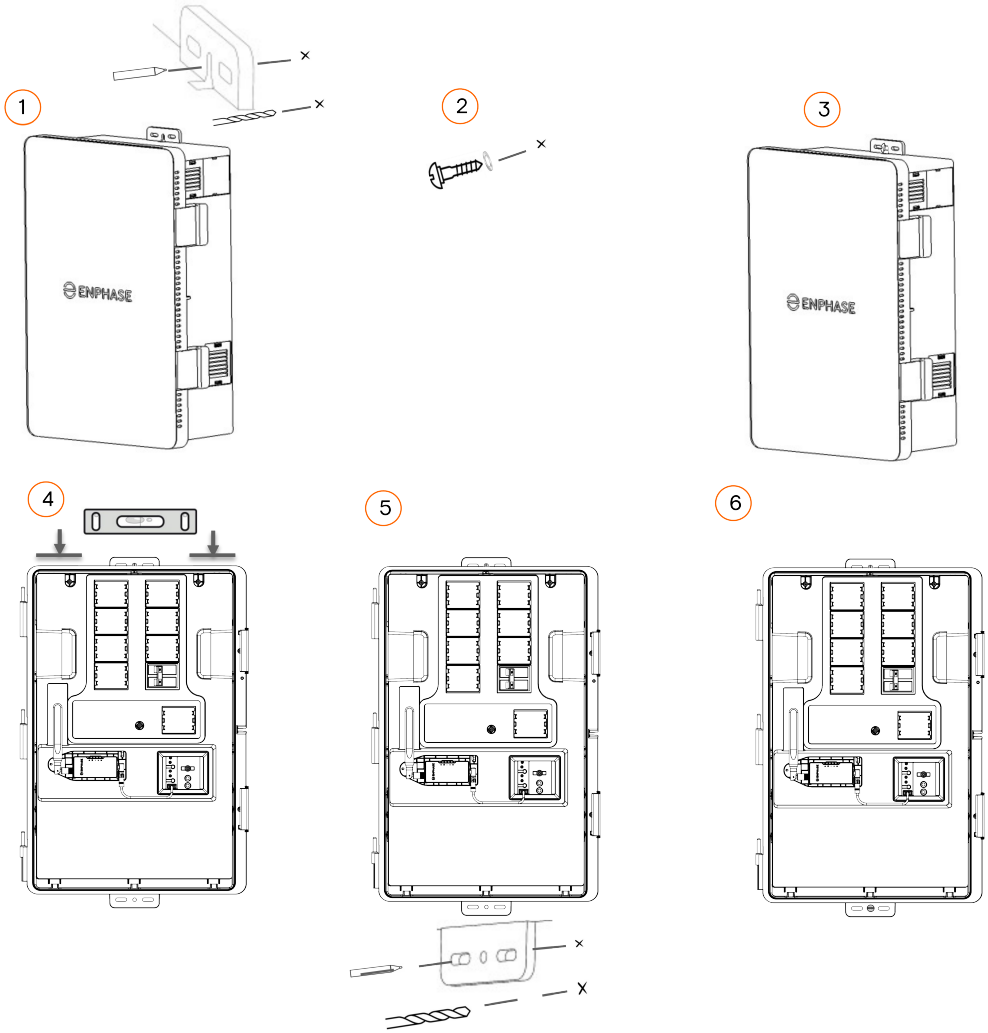

5. Enclosure internals

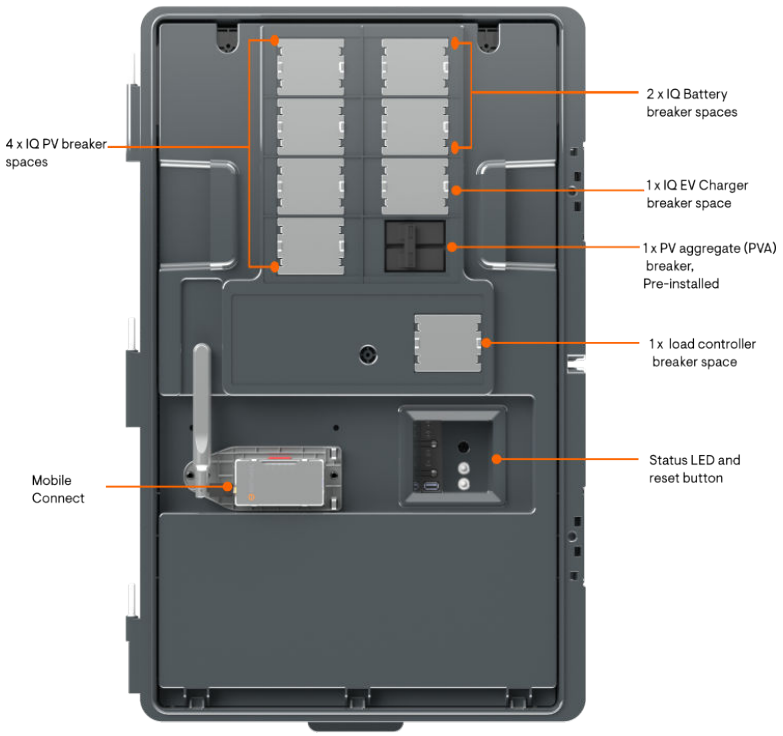

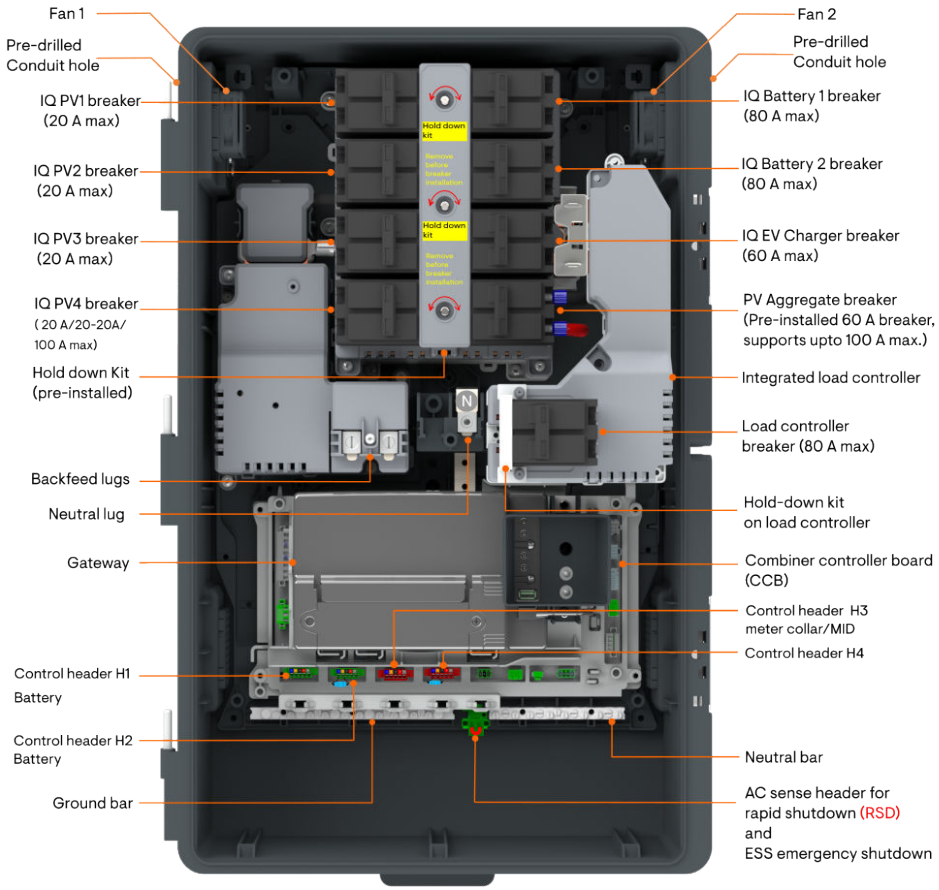

NOTE: If IQ Combiner 6C is installed at a readily accessible outdoor location, the PV aggregate breaker (60 A) works as a rapid shutdown device, pre-installed in the enclosure.

NOTE: The load controller is built into the unit. The relays on the load controller are shipped in the open state. To enable load support, the system must be fully commissioned. Any loads connected to the load controller will not function until commissioning is complete. Ensure the system is commissioned before leaving the site.

NOTE: X-IQ-AM1-240-6C-3BRK is shipped with two pre-installed 20 A breakers for PV circuits and one pre-installed 40 A breaker for the battery circuit. Additional PV, battery, or EVSE breakers shown are for demonstration purposes only and should be installed as needed.

NOTE: IQ Combiner 6C is shipped with a 60 A PVA breaker pre-installed to support 3 × 20 A PV branch circuits. For more than 3 × 20 A PV branch circuits, upsize the PVA to an 80/100 A breaker.

NOTE: PV4 can be used to connect a 20 A individual breaker, a quad breaker (2 × 20 A), or an external combiner rated up to 100 A. If PV4 is fully utilized with a 100 A breaker for aggregating an external Enphase legacy combiner, then PV1, PV2, and PV3 must not be used. However, if the external combiner is rated below 100 A (for instance, 64 A), then PV1, PV2, and PV3 may also be used, provided the total current does not exceed the PV busbar rating of 100 A.

6. Conduit drilling

- The bottom and lower sides of the IQ Combiner 6C are the best locations to drill holes for conduit fittings.
- Rear conduit entries below the electronics area are also supported.
- Do not drill on the upper left and upper right sides; pre-drilled conduit entries are available at these positions.
- Use a snap punch or other type of center punch to prevent the drill from wandering.
- Drill a pilot hole with a smaller drill before using a step drill bit.

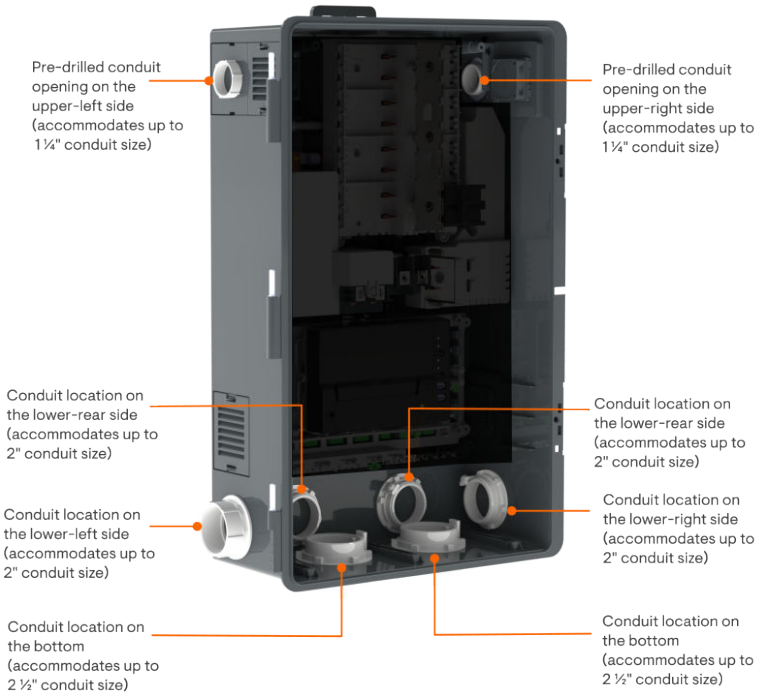

NOTE: Do not drill through the enclosure ribs or internal parts.

NOTE: Ensure all conduit entries are sealed to prevent water ingress.

Conduit location	Maximum conduit size
Upper-left, upper-right (pre-drilled)	¾", 1", 1¼"
Lower-left, lower-right	Up to 2"
Rear	Up to 2"
Bottom	Up to 2 ½ "

NOTE: Refer to Upper-side conduit (pre-drilled) on page 14 for more details on running conduits through the upper-side location.

NOTE: Do not drill on the top or any of the non-specified regions.

NOTE: The unit is shipped with ¾" (left) and 1¼" (right) conduit plates pre-installed. A 1" conduit plate is included in the accessory kit.

6.1. Upper-side conduit (pre-drilled)

The IQ Combiner 6C has two pre-drilled conduit locations on the upper side of the enclosure, covered with a plastic cover and a rubber plug. The pre-installed conduit plate can be used to attach the conduit with a locknut for a complete installation. The metal conduit plate beneath the plastic cover can be replaced with conduit plates from the accessory kit. Follow the steps to use the upper side conduit for wiring.

- IQ Combiner 6C is pre-installed with a 3/4" conduit plate on the upper-left conduit for PV wiring.
- IQ Combiner 6C is pre-installed with a 1¼" conduit plate on the upper-right conduit for battery/EVSE wiring.

- The accessory kit provided in the packaging includes a 1" plate and a 1¼" conduit plate. Use the conduit plate as required.

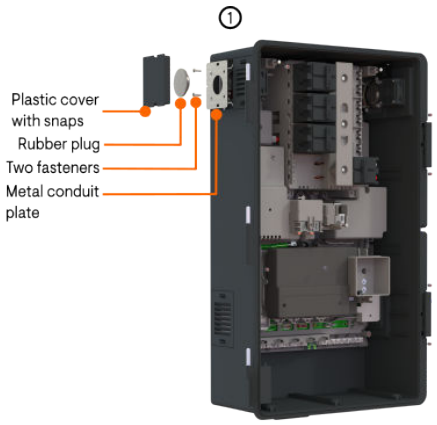

Step 1:
Detach the plastic cover secured by snaps.
Remove the rubber cap sealing the conduit holes in the plate.
Unscrew the two fasteners to take off the metal conduit plate.

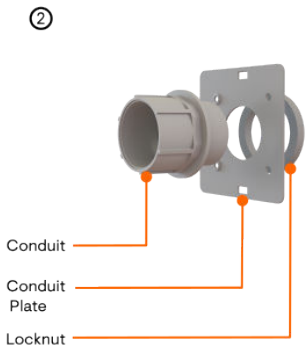

Step 2:
Secure the conduit fittings with a lock nut, ensuring the conduit plate is sandwiched between them.

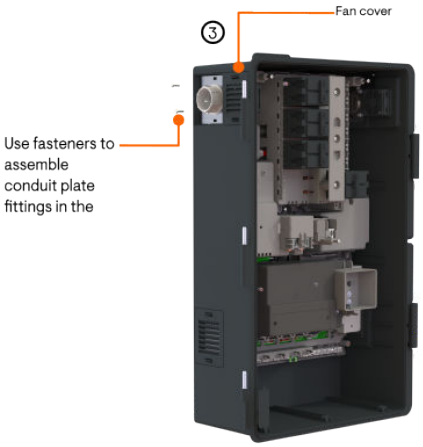

Step 3:
Reinstall the assembled conduit plate fittings into the enclosure using two fasteners.

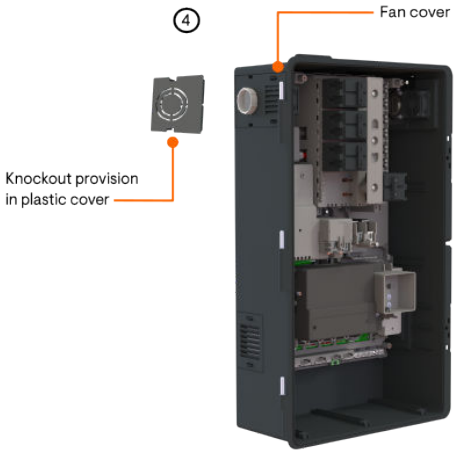

Step 4:
Utilize the knockout provision in the plastic cover when sealing the enclosure during installation.

NOTE: Ensure to seal the conduit entries to prevent water ingress.

NOTE: The metal conduit plate is internally grounded, connecting it to the ground bar. Therefore, no separate grounding is required when connecting EMT conduits to the ground plate.

NOTE: Do not remove the fans (right and left) for upper-side conduit installations.

NOTE: Do not remove the fan cover. If removed for the convenience of installation, ensure it is reinstalled properly. An enclosure without a cover may lead to water ingress.

6.1.1 Wiring using upper-side conduit (pre-drilled)

- IQ Combiner 6C provides two pre-drilled conduit entry locations on the top left and right sides of the enclosure. The pre-drilled conduit locations on the top side of the enclosure are covered with a plastic cover and a rubber plug.
- IQ Combiner 6C is pre-installed with a 3/4" conduit plate on the left top conduit for PV wiring.
- IQ Combiner 6C is pre-installed with a 1¼" conduit plate on the right top conduit for battery/EVSE wiring.

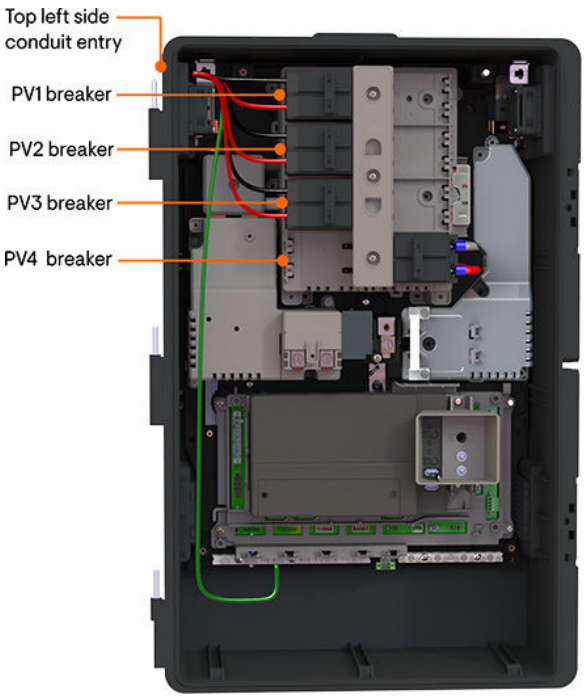

PV wiring

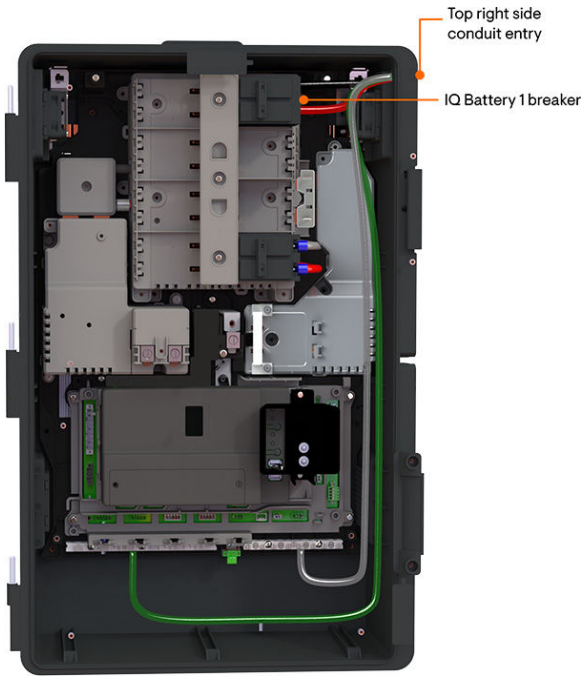

Battery wiring

NOTE: The top right conduit supports wiring for a battery breaker with a maximum of 3 AWG for L1, L2, and N, with 4 AWG for Ground.

NOTE: If using more than 3 PV branch circuits, upsize the PVA breaker to an 80/100 A breaker.

NOTE: Use top conduit, considering local codes for wire bend radius.

NOTE: The metal conduit plate is internally grounded, connecting it to the ground bar. Therefore, no separate grounding is required when connecting EMT conduits to the ground plate.

6.1.2 Prevent water ingress through conduits

When utilizing top pre-drilled conduit entries, use an appropriate conduit drainage or routing method to prevent water from tracking along the wiring and entering the enclosure.

Apply at least one of the following conduit setups along with thorough sealing:

- If using a T-body conduit, install a dedicated drain conduit fitting at the bottom port.
- If using a standard LB conduit body, drill a small weep hole at the absolute lowest point of the body to allow trapped water to escape.
- Utilize a drip-loop style configuration where the conduit dips significantly below the enclosure entry point before heading back up.

Thoroughly seal the drilled area and all conduit connection points with outdoor-rated sealant to prevent moisture from entering the enclosure.

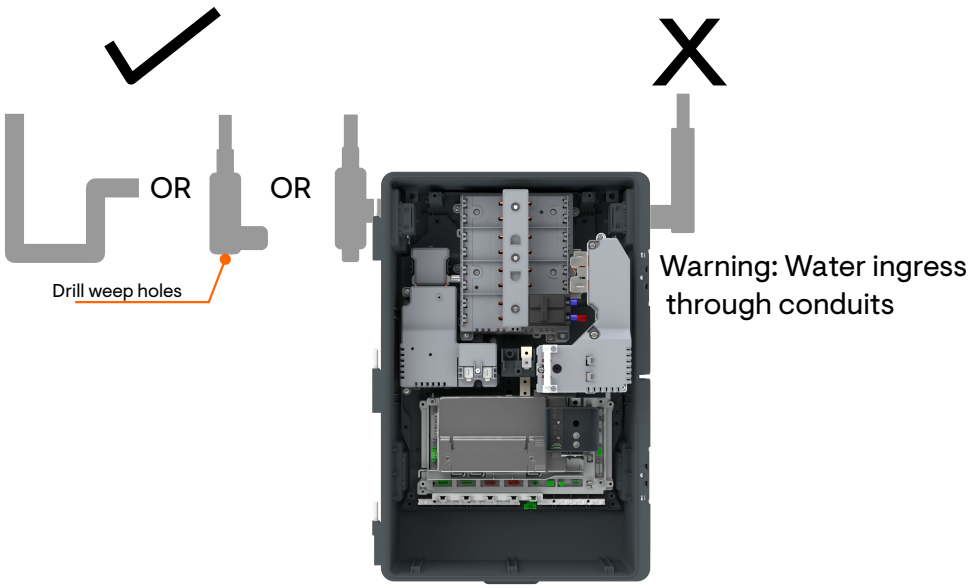

To avoid water ingress through the top conduits, use T-body conduits or LB conduit with drilled weep holes or drip loop installation. Ensure to use outdoor water sealants .

6.2. Dimensions for the conduit drilling zone

Lower sides (left and right) conduit drilling zone

The lower side conduit accommodates up to 2".

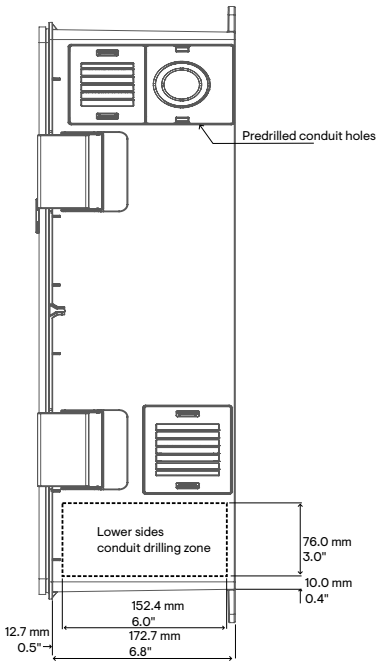

Bottom conduit drilling zone

The bottom conduit accommodates up to 2 ½".

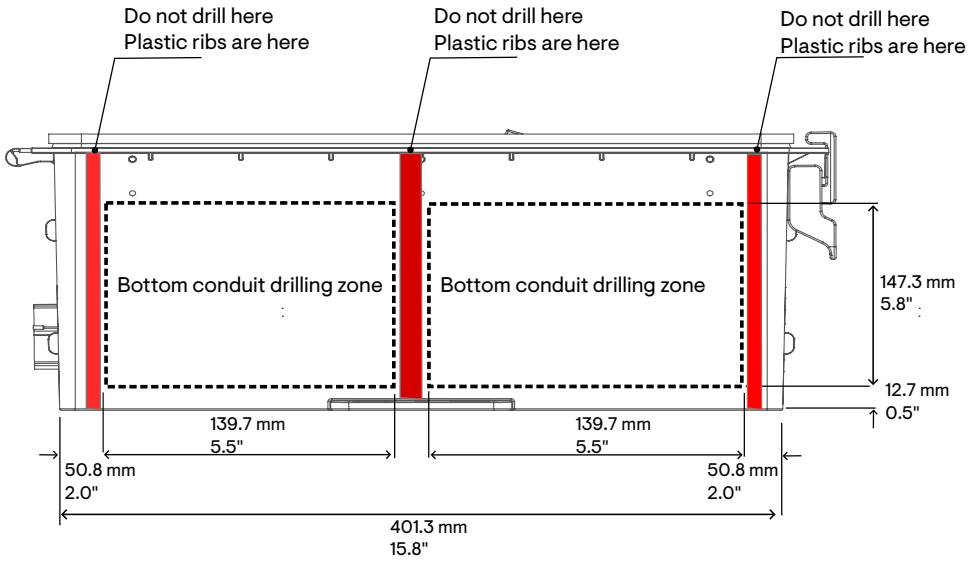

Rear conduit drilling zone

The rear conduit accommodates up to 2".

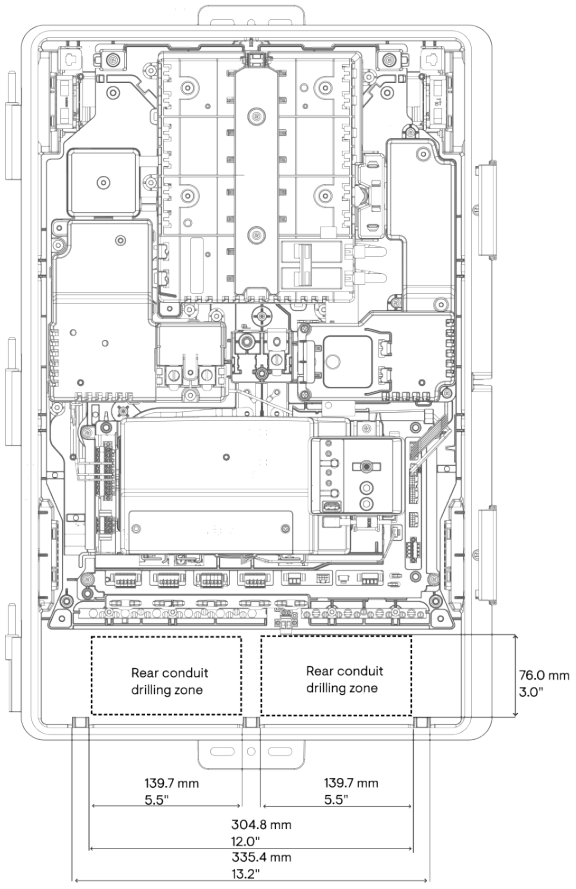

7. Wiring sequence

After drilling the conduit or planning the wiring with pre-drilled upper-side conduit, ensure a seamless installation of the IQ Combiner 6C by following the wiring sequence. This will prevent wiring overlaps and maintain access to connectors, lugs, and terminals.

Follow these steps:

1. Ride Through Power supply board assembly: Determine if the system needs a Ride Through Power Supply accessory. If the battery is absent and IEEE 2030.5 applies, assemble and wire the power supply accessory first. Refer to Ride Through Power supply board for more details.
2. Ground and neutral wiring: Wire the ground and neutral connectors for all DER and backfeed connections.
3. CCB and gateway connections:
   - Connect all control wiring connectors on the CCB.
   - Connect the EVSE CT (if required).
4. General wiring:
   - Connect IQ PV1/2/3/4, IQ Battery, IQ EV Charger, and the integrated load controller.

- Connect PV disconnect and grid-side disconnect (if required). Refer to Disconnect and rapid shutdown initiator wiring on page 43 for more details.

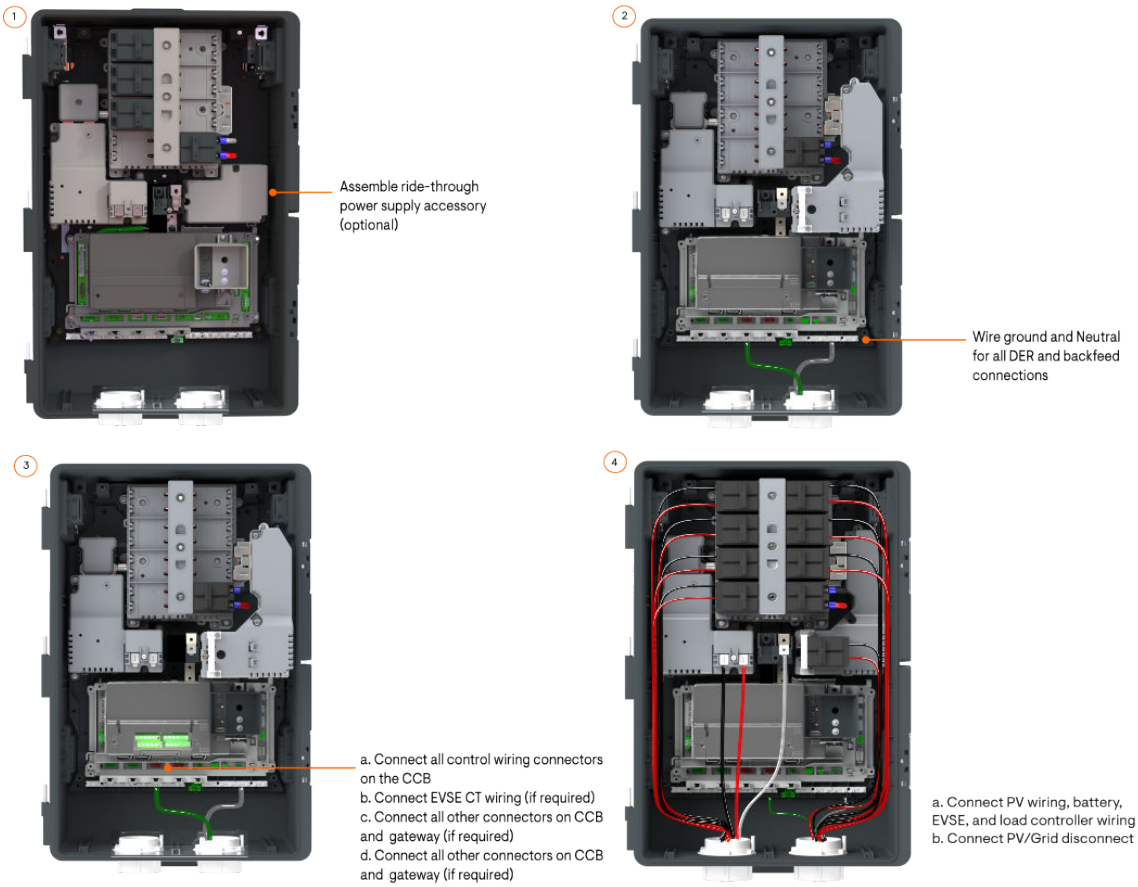

For wiring information, see IQ PV wiring on page 37, IQ Battery wiring on page 39, and IQ EV Charger wiring on page 39.

8. Ride-through power-supply board

A ride-through power-supply board (RT-PSB) with capacitors may be required in solar-only systems if the utility mandates the IEEE 2030.5 connection to be powered during low-voltage ride-through. Some jurisdictions require compliance with IEEE 2030.5 for grid ride-through cases, particularly for solar-only systems.

NOTE: For grid-tied or grid-forming systems with batteries, ride-through is supported by the batteries themselves and does not require the use of this accessory board.

The RT-PSB with capacitors (SKU: X-IQ-NA-PSBECAP-R6) is an accessory that helps manage the interaction between the solar system and the grid, ensuring compliance with local regulations and standards. It is not mandatory and can be ordered separately if needed.

The assembly of the RT-PSB is a two-step process.

- Disassemble the integrated load controller.
- Assemble the Ride Through Power supply board.

Follow the steps outlined below for its assembly.

8.1. Integrated load controller: Disassembly

- The assembly of the power supply board with the capacitors accessory requires disassembly and removal of the integrated load controller with its connectors.
- Ensure the system is completely powered off to avoid any electrical hazards.
- Ensure to disconnect any wires connected to the load controller breaker if the load controller is already in use.
- Ensure to disconnect the load relay and CT connectors.
- Ensure the space is clear and ready for the installation of the ride-through power supply accessory.

Follow the steps to disassemble the load controller.

1. Unplug the load controller relay connector and load controller CT connector.
2. Remove the plastic cover that is snapped onto the enclosure to access the terminals connecting the integrated load controller to the DER bus.
3. Unfasten the 2 × hex nut (7/16") using a hex socket driver.
4. Remove the hold-down kit to access the captive screw beneath it; thereafter, unfasten the 4 × captive screws.

1 Unplug the load controller relay connector and load controller CT connector.

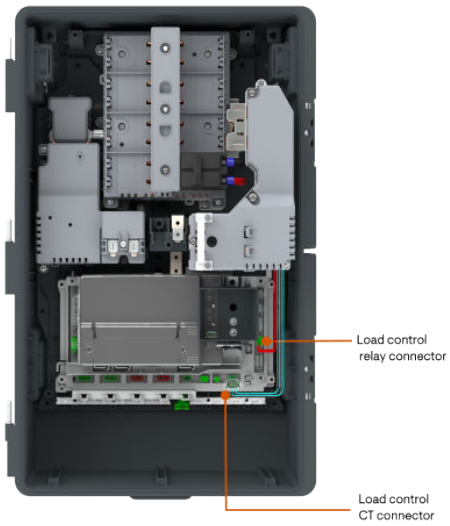

2 Remove the plastic cover that is snapped onto the enclosure to access the terminals connecting the integrated load controller to the DER bus.

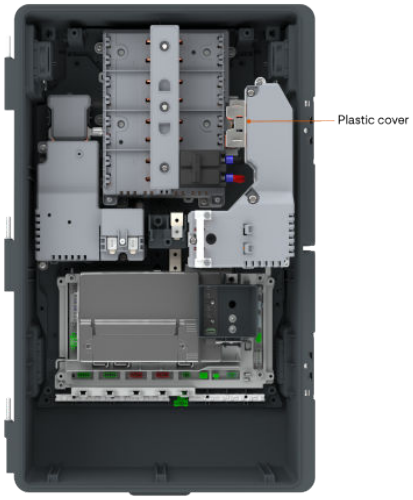

3 Unfasten the two hex nuts (7/16") using a hex socket driver.

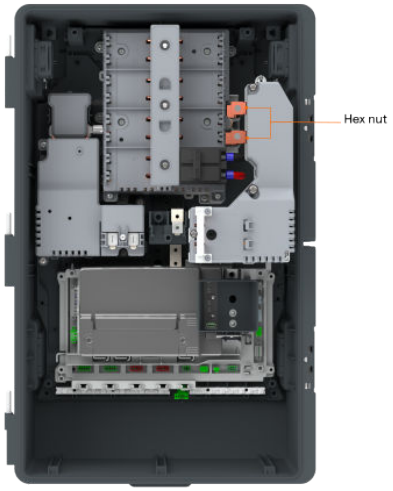

4 Remove the hold-down kit to access the captive screw beneath it, thereafter unfasten the four captive screws.

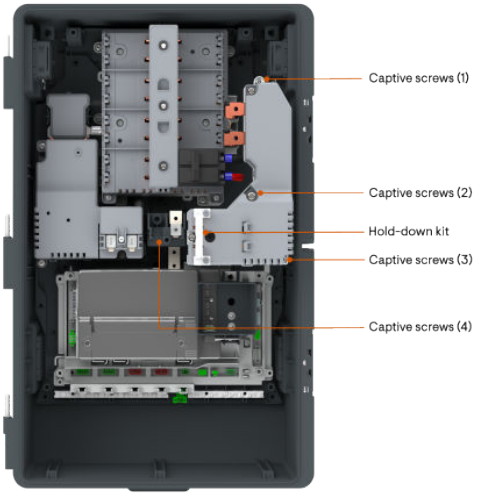

8.2. Power supply board with capacitors: Assembly

Mounting: The RT-PSB accessory includes captive screws, which are used to install the ride-through power supply to the base enclosure. Use a Phillips screw head driver for torquing.

Follow these steps:

1. Ensure the load controller is disassembled from the enclosure.
2. Use three captive screws in the RT-PSB accessory to mount it in the enclosure. (Torque to 1 N m/8.85 lb-in).
3. Connect the Ride Through Power supply accessory to the marked connector.
4. Ensure that the plastic cover removed during load controller disassembly is reinstalled.

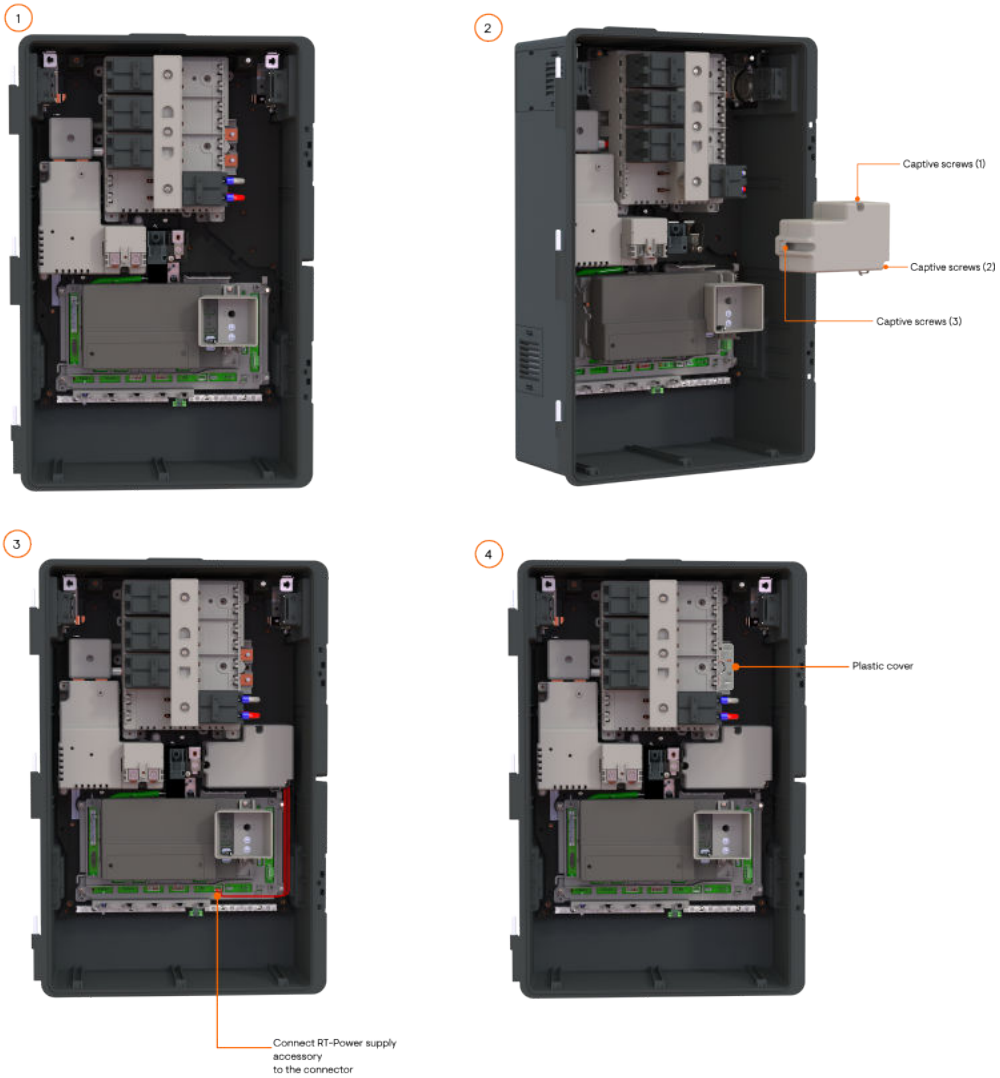

NOTE: The power supply accessory can only be installed if the integrated load controller is not mounted.

9. Control wiring

- The IQ Combiner 6C, along with the IQ Battery and IQ Meter Collar, requires control connections between the devices to operate correctly. This is done using the Enphase Control Cable (SKU: CTRL-SC3-NA-01).
- The control cable must comply with UL 3003, UL 1277, and UL 83 standards. The Enphase Control Cable has optimal impedance and has been validated for optimal system performance. Third-party cables may not have the correct characteristic impedance and therefore may not operate reliably. Enphase cannot guarantee performance when a third-party control cable is used.
- The same conduits can be used for power and control wire routing only when using an Enphase Control Cable.
- All five pins (CTRL H, CTRL L, GND, 24 V, Drain) can be terminated in a control header connector on each system component. The drain wire should only be terminated on one end of the control wiring between system components.
- The Combiner 6C features two color-coded control wire headers (red and green) labeled H1, H2, H3, and H4.
- In the IQ Combiner 6C, the green headers labeled as control headers H1 and H2 are specifically designated for battery control connections.
- In IQ Combiner 6C, the red headers labeled as control header H3 are specifically designated for IQ Meter Collar control connections.
- The other red headers labeled as control header H4 are for future Enphase accessories. The control header H4 is shipped with a pre-installed termination resistor.

NOTE: Do not remove the pre-installed termination resistor from control header H4.

- Battery control headers (H1 and H2) must each be terminated with a resistor at both ends. These terminations can be located either within the IQ Battery headers or the IQ Combiner.

NOTE: IQ Combiner 6C is shipped with pre-installed termination resistors on one of the green headers. Remove the termination resistor as required.

- Refer to the connector connections label available on the product for easy reference.
- The control wiring length from the IQ Combiner 6C to the IQ Battery or the IQ Meter Collar must not exceed 76.2 meters (250 feet) to ensure the system operates according to specifications.

- Make sure the drain wires do not come in contact with any live connection.

Follow these steps for control wiring:

1. Identify the control headers in the system components, such as IQ Meter Collar, IQ Combiner 6C, and IQ Battery.

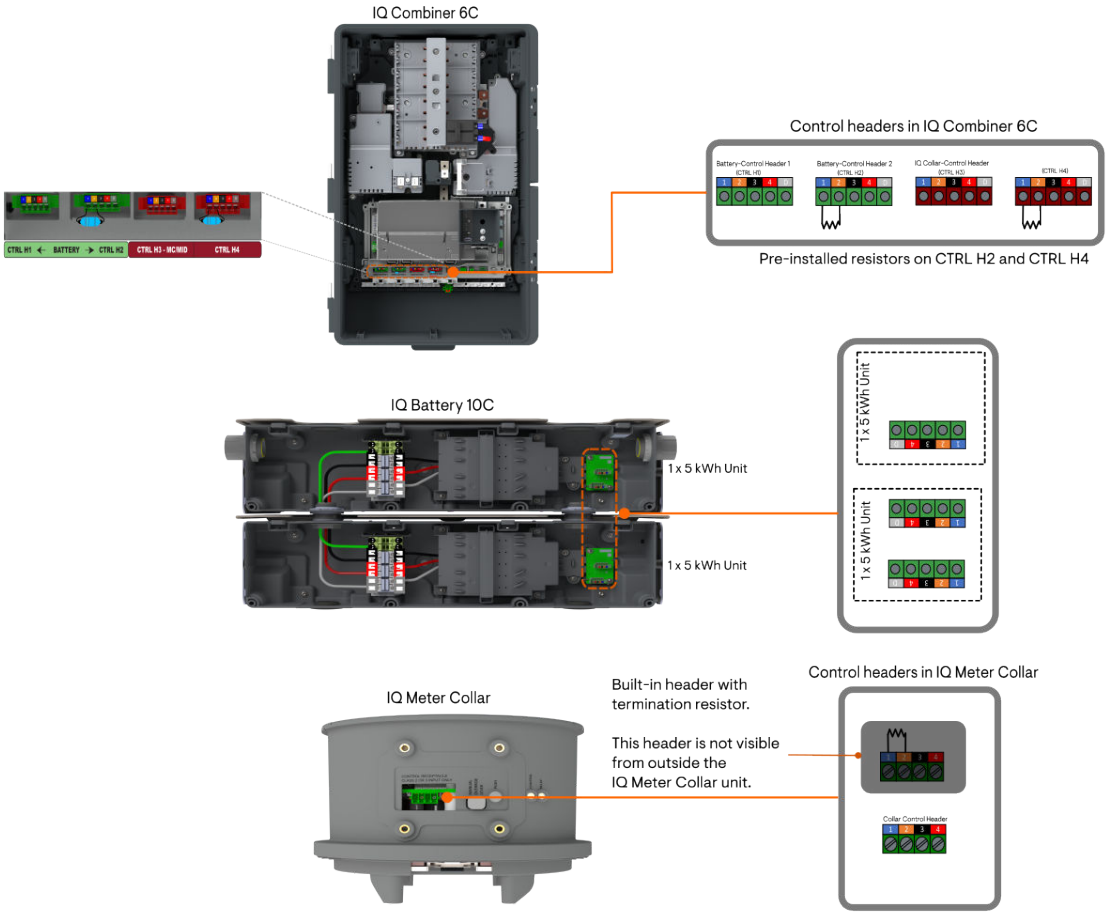

2. Strip the control wires as per the specifications. Connect (CTRL L, CTRL H, 24 V) on the header marked 1,2,3,4. Connect the drain wire to the terminals marked D for IQ Combiner 6C and IQ Battery.

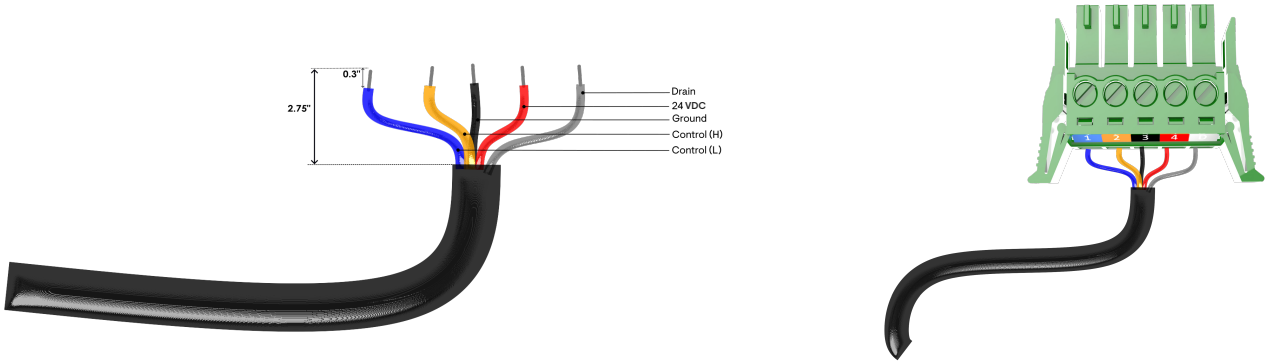

3. Use the wire clamp feature provided to route the control cable in the IQ Combiner 6C.

Control cable wiring and routing in IQ Combiner 6C

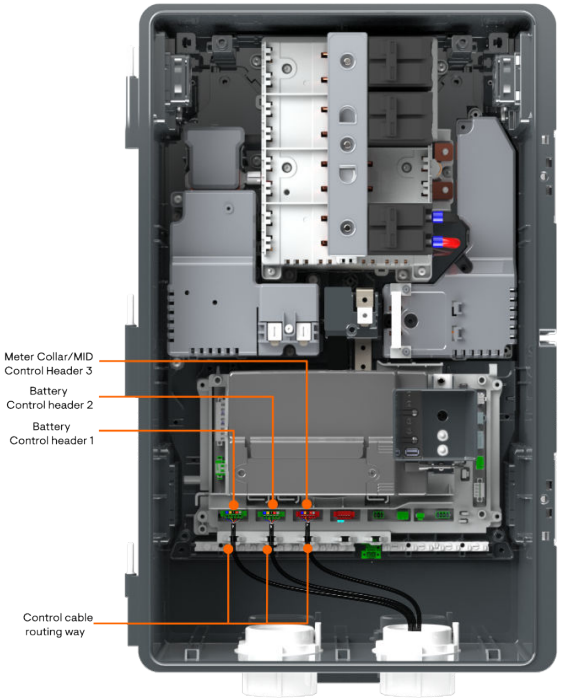

NOTE: IQ Combiner 6C unit includes a pre-installed termination resistor at CTRL H2 and CTRL H4.

NOTE: Termination resistor on CTRL H3 Battery can be removed for control wiring with batteries.

NOTE: Do not remove the termination resistor from CTRL H4.

NOTE: The IQ Meter Collar features a 4-pin control wiring header. Do not connect the drain wire to the IQ Meter Collar. The drain wire from the IQ Meter Collar's control cable must be terminated only in the IQ Combiner 6C.

NOTE: The control header within the IQ Meter Collar does not require a separate termination resistor as it has a built-in resistor on its control port.

9.1. Sequence 1: Control wiring between one IQ Battery 10C, IQ Combiner 6C, and IQ Meter Collar

IQ Meter Collar → IQ Combiner 6C → 1 unit of IQ Battery 10C connected to IQ Battery header 1

NOTE: Make sure to terminate the IQ Battery control header 2 in this sequence.

Control wiring between system components

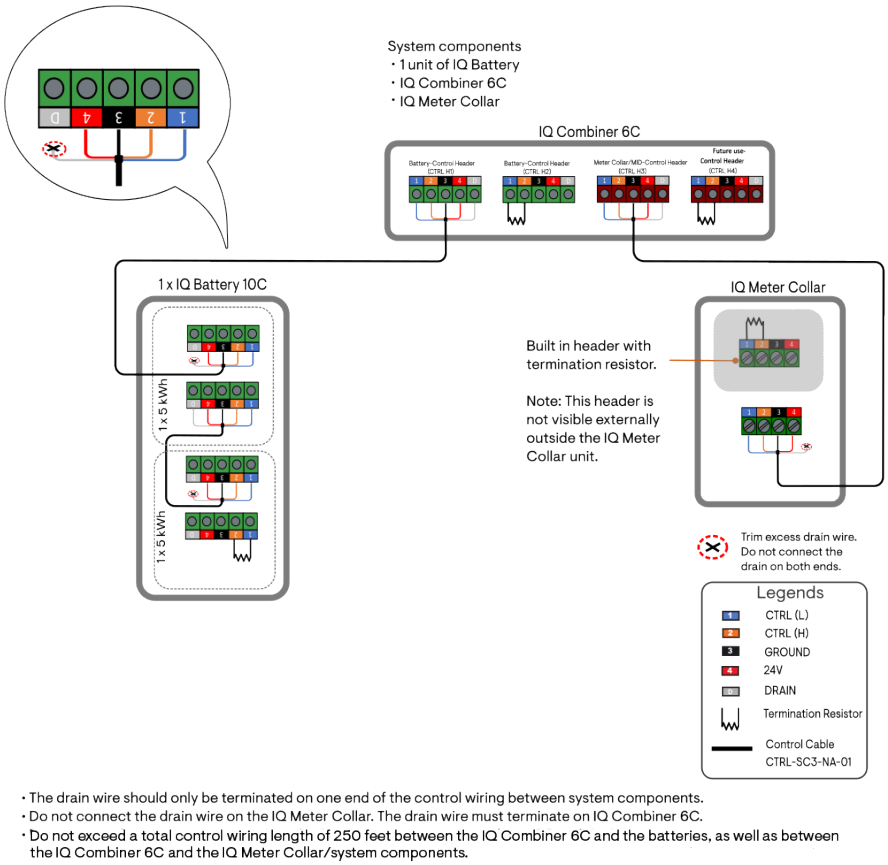

- The drain wire should only be terminated on one end of the control wiring between system components.
- Do not connect the drain wire on the IQ Meter Collar. The drain wire must terminate on IQ Combiner 6C.
- Do not exceed a total control wiring length of 250 feet between the IQ Combiner 6C and the batteries, as well as between the IQ Combiner 6C and the IQ Meter Collar/system components.

NOTE: The drain wire should be terminated only on one end of the control wiring between system components.

NOTE: Do not connect the drain wire on the IQ Meter Collar. The drain wire must terminate on the IQ Combiner 6C.

NOTE: Do not exceed a total control wiring length of 250 feet (76.2 meters) between the IQ Combiner 6C and the batteries, as well as between the IQ Combiner 6C and the IQ Meter Collar/system components.

9.2. Sequence 2: Control wiring between two IQ Battery 10C, IQ Combiner 6C, and IQ Meter Collar

IQ Meter Collar → IQ Combiner 6C → 2 units of IQ Battery 10C connected to IQ Battery header 1

NOTE: Make sure to terminate the IQ Battery control header 2 in this sequence.

Control wiring between system components

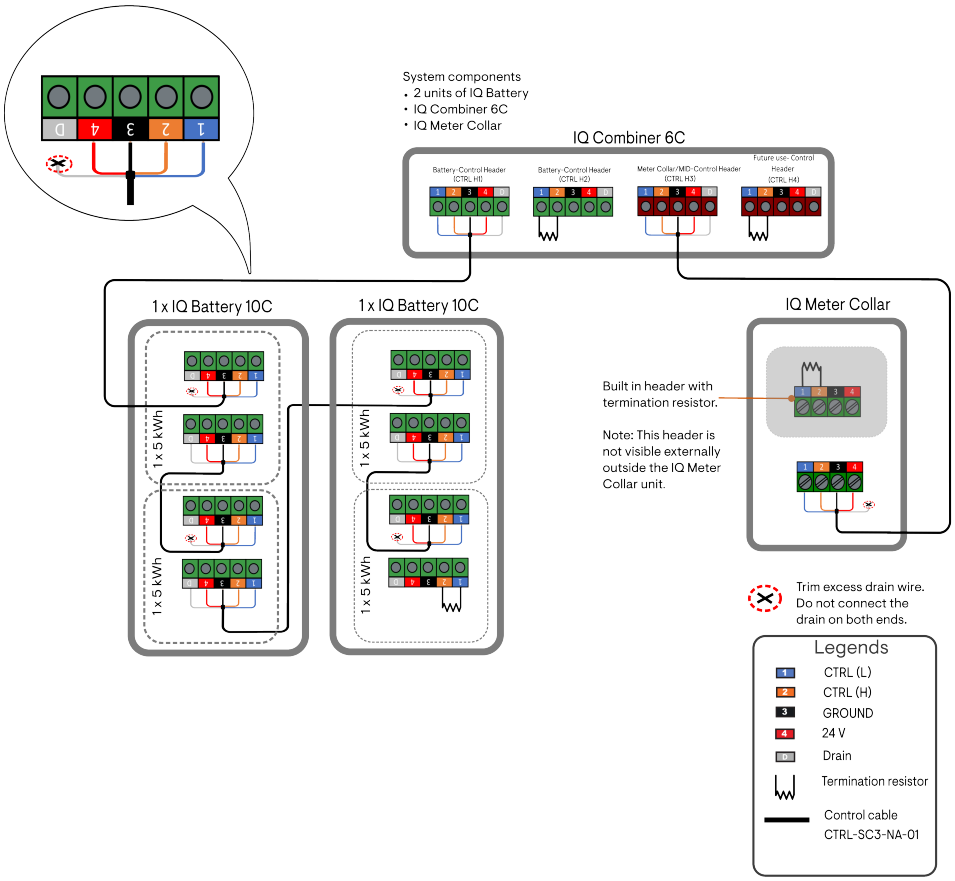

- The drain wire should only be terminated on one end of the control wiring between system components.
- Do not connect the drain wire on the IQ Meter Collar. The drain wire must terminate on IQ Combiner 6C.
- Do not exceed a total control wiring length of 250 feet between IQ Combiner 6C and the batteries.
- Do not exceed a total control wiring length of 250 feet between IQ Combiner 6C and IQ Meter Collar/system components.

NOTE: The drain wire should only be terminated on one end of the control wiring between system components.

NOTE: Do not connect the drain wire on the IQ Meter Collar. The drain wire must terminate on the IQ Combiner 6C.

NOTE: Do not exceed a total control wiring length of 250 feet (76.2 meters) between the IQ Combiner 6C and the batteries, as well as between the IQ Combiner 6C and the IQ Meter Collar/system components.

9.3. Sequence 3: Control wiring between four IQ Battery 10C, IQ Combiner 6C, and IQ Meter Collar

IQ Meter Collar → IQ Combiner 6C → 2 units of IQ Battery 10C connected to IQ Battery header 1

IQ Meter Collar → IQ Combiner 6C → 2 units of IQ Battery 10C connected to IQ Battery header 2

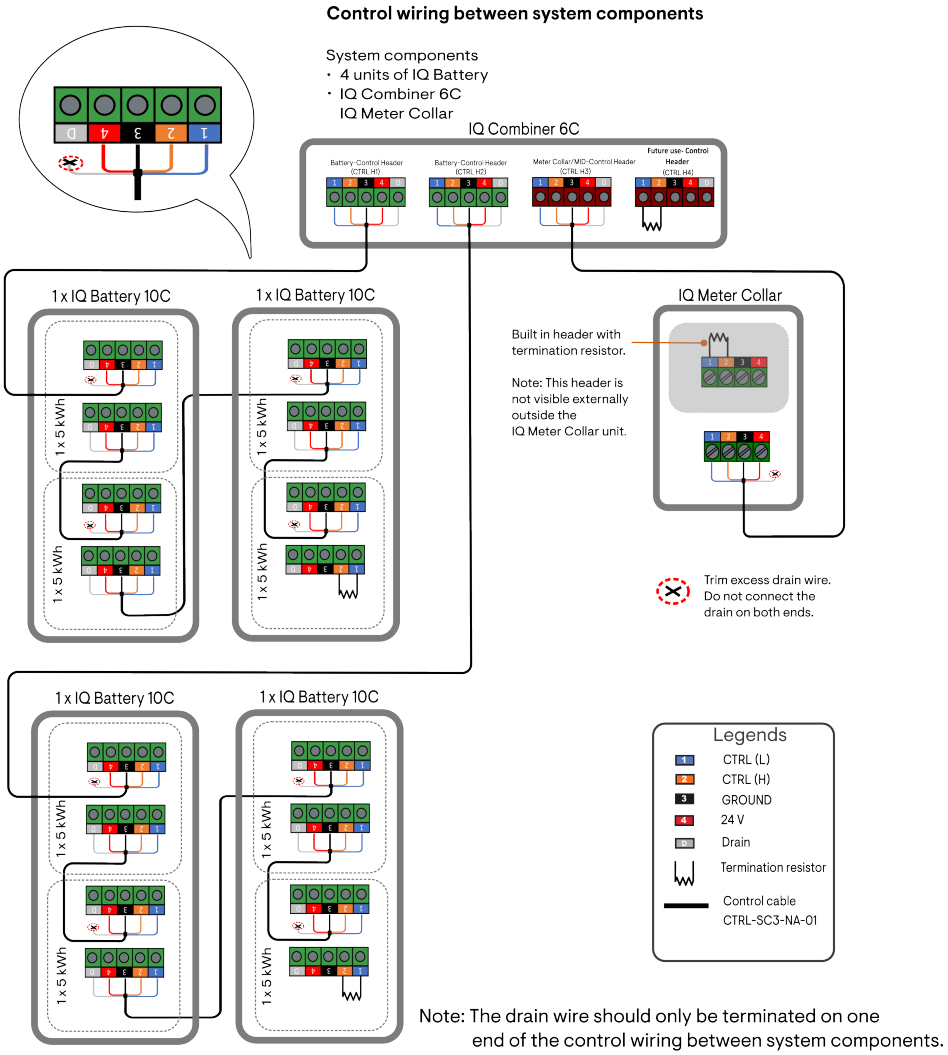

Note: The drain wire should only be terminated on one end of the control wiring between system components.

NOTE: The drain wire should only be terminated on one end of the control wiring between system components.

NOTE: Do not connect the drain wire on the IQ Meter Collar. The drain wire must terminate on the IQ Combiner 6C.

NOTE: Do not exceed a total control wiring length of 250 feet (76.2 meters) between the IQ Combiner 6C and the batteries, as well as between the IQ Combiner 6C and the IQ Meter Collar/system components.

9.4. Sequence 4: Control wiring between four IQ Battery 10C, IQ Combiner 6C, without the IQ Meter Collar

IQ Meter Collar → IQ Combiner 6C → 2 units of IQ Battery 10C connected to IQ Battery header 1 (no IQ Meter Collar in the system)

IQ Meter Collar → IQ Combiner 6C → 2 units of IQ Battery 10C connected to IQ Battery header 2 (no IQ Meter Collar in the system)

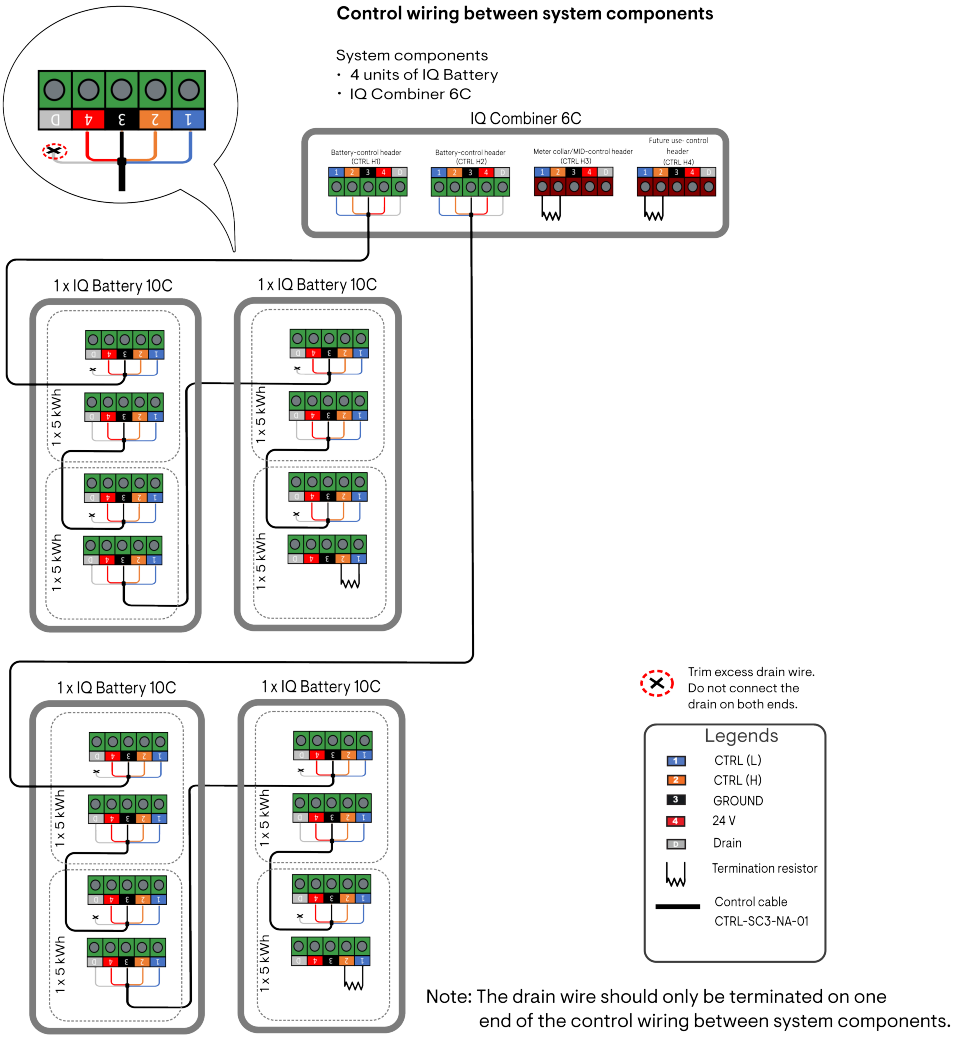

NOTE: Make sure to terminate the IQ Meter control header in this sequence.

NOTE: The sequence can be adjusted to accommodate more than four or fewer than four units of IQ Battery.

NOTE: The drain wire should only be terminated on one end of the control wiring between system components.

NOTE: Do not connect the drain wire on the IQ Meter Collar. The drain wire must terminate on the IQ Combiner 6C.

NOTE: Do not exceed a total control wiring length of 250 feet (76.2 meters) between the IQ Combiner 6C and the batteries.

9.5. Sequence 5: Control wiring between four IQ Battery 10C units using one header in IQ Combiner 6C

IQ Meter Collar → IQ Combiner 6C → 4 units of IQ Battery 10C connected to IQ Battery header 1

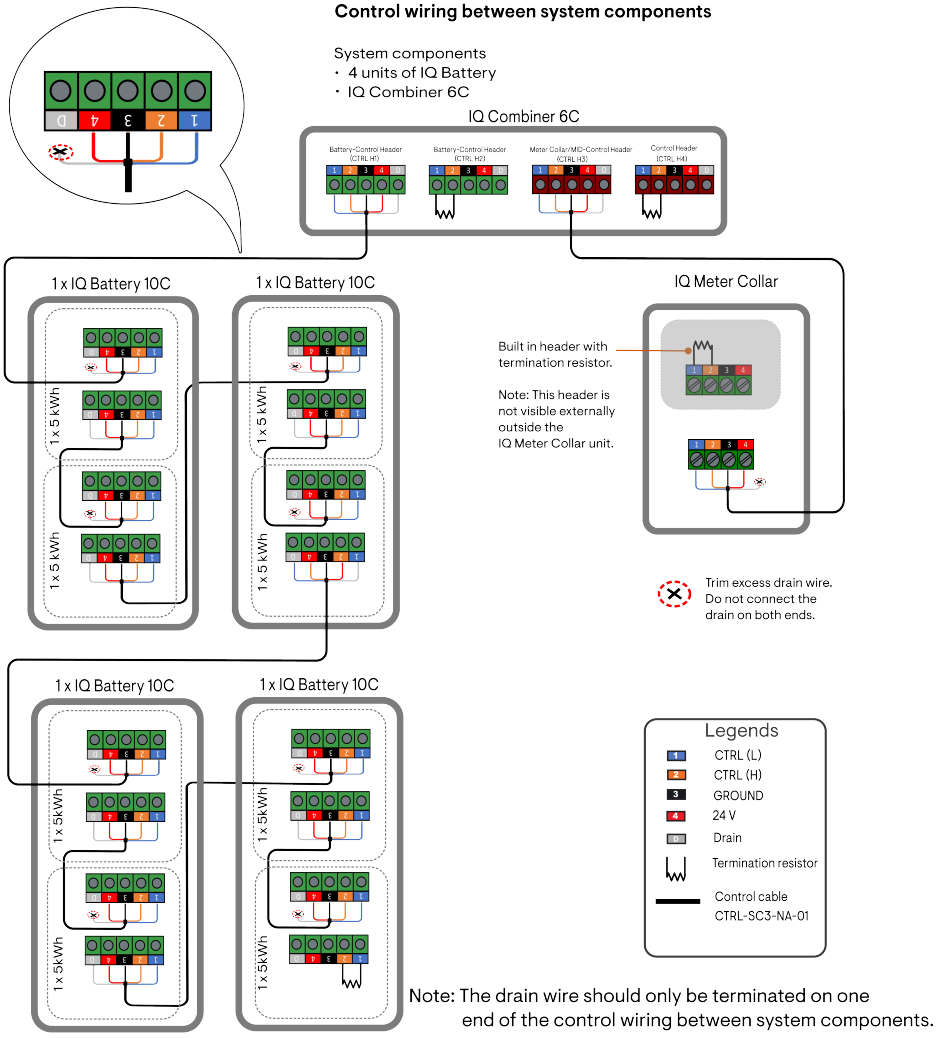

Note: The drain wire should only be terminated on one end of the control wiring between system components.

NOTE: The sequence can be adjusted to accommodate more than four or fewer than four units of IQ Battery.

NOTE: The sequence can be used without the IQ Meter Collar as well. Make sure to terminate the IQ Meter Collar control header if the IQ Meter Collar is not included in the system.

NOTE: The drain wire should only be terminated on one end of the control wiring between system components.

NOTE: Do not connect the drain wire on the IQ Meter Collar. The drain wire must terminate on the IQ Combiner 6C.

NOTE: Do not exceed a total control wiring length of 250 feet (76.2 meters) between the IQ Combiner 6C and the batteries, as well as between the IQ Combiner 6C and the IQ Meter Collar/system components.

10. Consumption CTs wiring

Full home monitoring can be achieved using either Consumption CTs (L1, L2) or an IQ Meter Collar. However, certain configurations may require the installation of both the IQ Meter Collar and Consumption CTs to support comprehensive monitoring.

- Applicable Consumption CT SKU
  - SKU: CT-200-CLAMP-2 A (2 units of CTs with color-coded cables for L1, L2. Black/Red cable to monitor consumption L1, brown/purple cable to monitor L2).
  - SKU: CT-200-CLAMP (2 units of CTs with blue-white colored cables) can also be used.

  There are two methods for wiring Consumption CTs, depending on the system configurations used.
- Method 1: Consumption CTs Only
  - Wire Consumption CTs directly to the CT position on the load controller.
  - Suitable when only Consumption CTs are required for monitoring.
- Method 2: Parallel Consumption and External CTs
  - Connect Consumption CTs in parallel with external CTs.

- Suitable when Consumption CTs and monitoring legacy/third-party PV are required

- Applicable system configurations are listed in the table below.

Configuration	System type	Need Consumption CT wiring	Methods of Consumption CT wiring
1	Grid-tied, Solar Only (without IQ Meter Collar)	Yes	Method 1: Wire Consumption CTs on the load controller CT position
2	Grid-tied, Battery Only (without IQ Meter Collar)	Yes	Method 1: Wire Consumption CTs on the load controller CT position
3	Grid-tied, Solar Plus Battery (without IQ Meter Collar)	Yes	Method 1: Wire Consumption CTs on the load controller CT position
4	Grid-tied, Solar Plus Battery + legacy microinverters/third-party PV (without IQ Meter Collar)	Yes	Method 2: Parallel Consumption CTs and external CTs
5	Grid-forming, Whole Home backup (with IQ Meter Collar behind the utility meter behind the utility meter)	Not required	Not required
6	Grid-forming, Whole Home backup + legacy microinverters/third-party PV (with IQ Meter Collar behind the utility meter)	Not required	Not required
7	Grid-forming, Whole Home backup (IQ Meter Collar in a discrete meter pan)	Not required	Not required
7a	Grid-forming - Whole Home backup with supply-side connection	Not required	Not required
8	Grid-forming, Partial Home backup (IQ Meter Collar in a discrete meter pan)	Yes	Method 1: Wire Consumption CTs on the load controller CT position
9	Grid-forming, Partial Home backup + legacy microinverters/third-party PV (IQ Meter Collar in a discrete meter pan)	Yes	Method 2: Parallel Consumption CTs and external CTs
10	Grid-forming - Whole Home backup with Enphase legacy combiner (with IQ Meter Collar behind the utility meter)	Not required	Not required
11	Grid-forming - Whole Home backup with more than one IQ Combiner 6C	Not required	Not required

NOTE: The system may need a software upgrade during commissioning to support legacy/third-party PV configuration on the load controller space.

10.1. Method 1: Wire Consumption CTs on the load controller CT position

- Ensure that the main panel remains de-energized until the CT wires are securely connected.
- Use a new set of clamp/split 200 A CTs to monitor the whole home consumption (on the main panel).

Steps to wire the Consumption CTs:

1. Clamp the CTs on the main panel feed wire L1 and L2. The direction of CTs must be away from the grid towards the main load center.
2. Remove the load controller CT header connection from connector 8.
3. Wire the leads of the CTs to the connector LC/Consumption CT to position 8.

NOTE: The load controller CTs will be unable to monitor the loads connected after the installation of the Consumption CT.

NOTE: Ensure to short the open load control CTs using a wire nut.

Follow the steps to replace the load controller CT headers with the Consumption CTs.

1 Remove the Load Controller CT header from connector 8.
Unfasten the CT wires from the header.

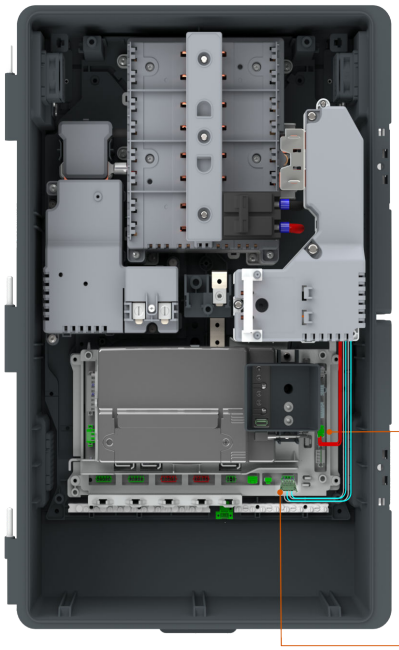

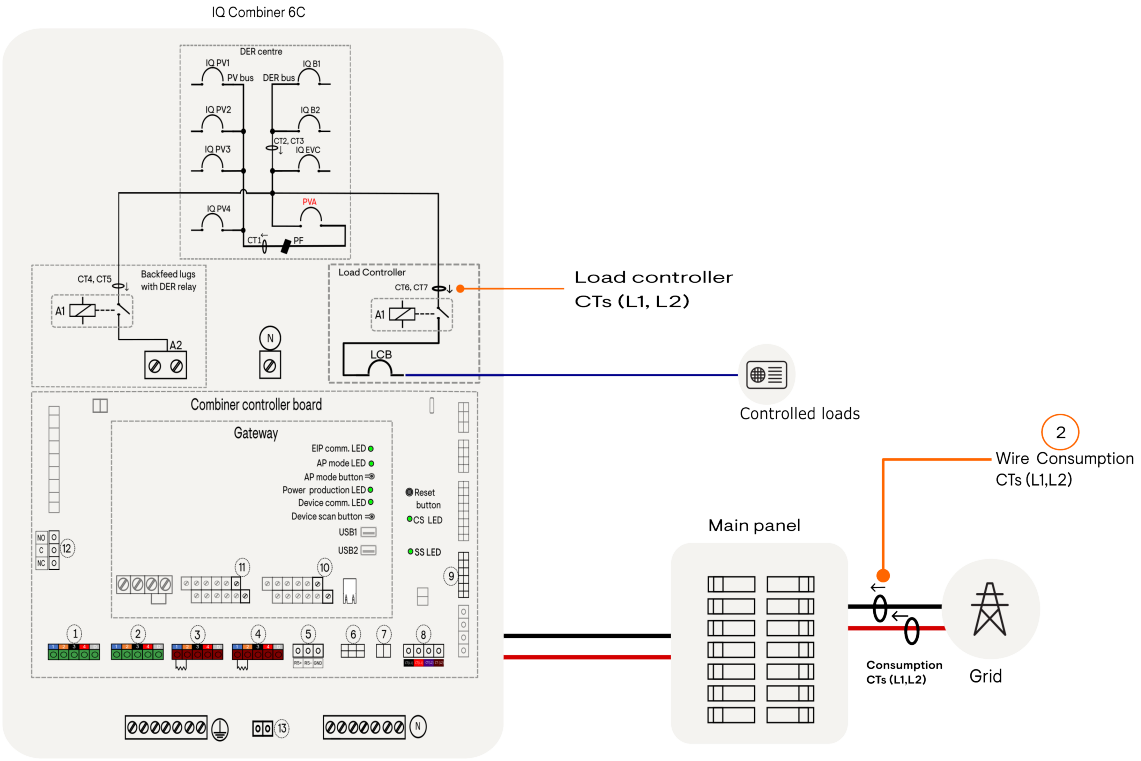

3 Fasten the lead wire of the consumption current transformers (CTs) to the header using screws.

Note: Consumption CT header is available in the accessory kit.

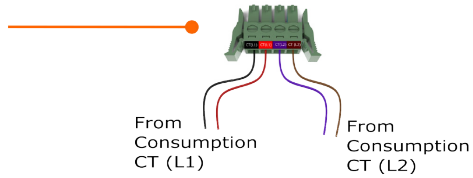



4 Connect the header to connector position 8 used for Load/Consumption CTs

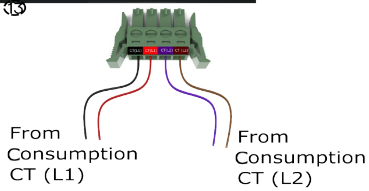

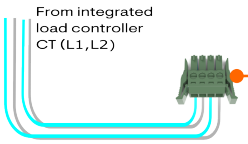

5 Unscrew the CT lead wires from load controller CT header

6 Ensure that the wires from the open load control CTs are shorted using a wire nut.

Note: Cut off the ferrule section of wire to use with the wire nut.

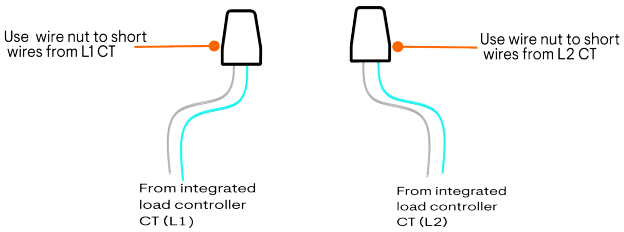

10.2. Method 1a: Parallel Consumption CTs

- Ensure that the main panel remains de-energized until the CT wires are securely connected.
- Use a new set of 200 A clamp/split Consumption CTs to monitor Whole Home consumption at the main panel.

Steps to wire the Consumption CTs:

1. Clamp the CTs on the main panel feed conductors (L1 and L2). Ensure the CT orientation is away from the grid and toward the main load center.
2. Remove the load controller CT header connection from connector position 8.
3. Parallel the two Consumption CTs using an inline splice connector.
4. Wire the CT leads to the LC/Consumption CT connector at position 8.

Applicable Consumption CT SKUs:

- SKU: CT-200-CLAMP-2A. Two CTs with color-coded cables:
  - Black/Red cable for L1 consumption
  - Brown/Purple cable for L2 consumption
- SKU: CT-200-CLAMP. Two CTs with blue/white color-coded cables (also supported)

NOTE: After installation of the Consumption CTs, the load controller CTs will no longer monitor loads connected downstream.

NOTE: Short any open load controller CTs using a wire nut.

NOTE: A maximum of three Consumption CTs connected in parallel is supported.

Follow these steps to replace the load controller CT headers with the Consumption CTs.

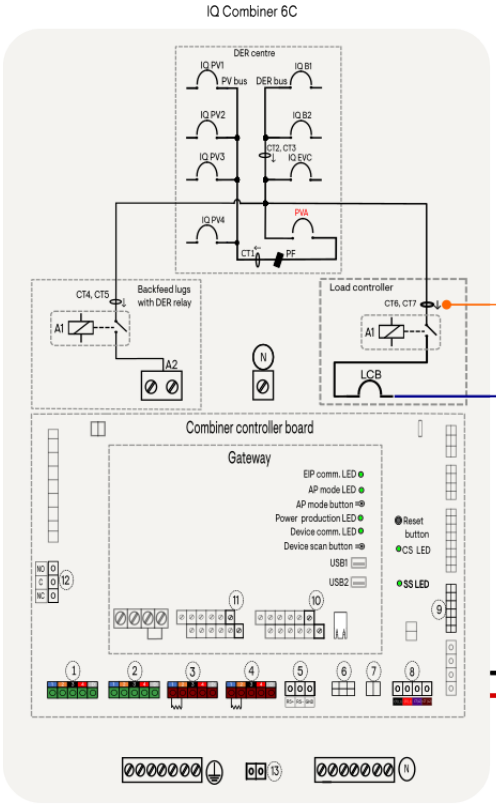

1 Remove the load controller CT header from connector 8. Unfasten the CT wires from the header.

Load controller CTs (L1, L2)

Controlled loads

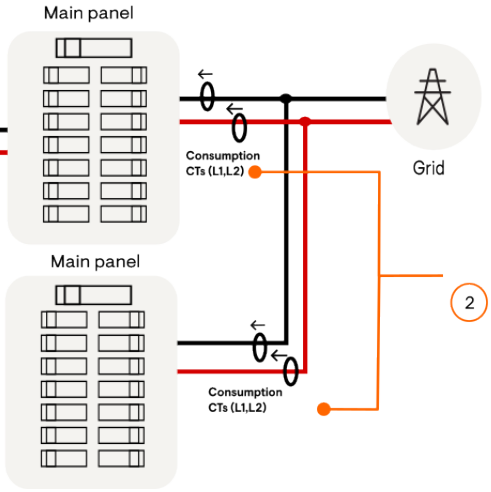

2 Wire Consumption 2x CTs (L1,L2)



5 Connect the header to connector position 8 used for Load/Consumption CTs

4 Fasten the lead wire of the output of the inline splice connector to the header.

Note: Consumption CT header is available in the accessory kit.

3 Use 4 x inline splice connector to parallel 2 x Consumption CTs

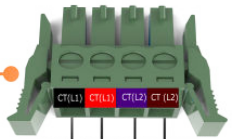

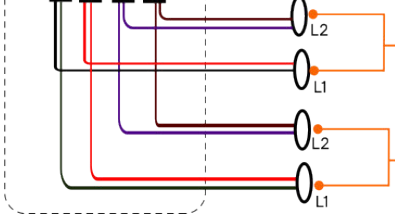

Consumption CTs (L1, L2) (Wire the CTs on the main panel)

Consumption CTs (L1, L2) (Wire the CTs on the main panel)

10.3. Method 2: Parallel Consumption CTs and external CTs

- Ensure that the main panel remains de-energized until the CT wires are securely connected.
- Remove the load controller CT header connection from the connection labelled as LC/Consumption CT.
- Wire Consumption CTs (L1, L2) on the main panel. Clamp the CTs on the main panel feed wire L1 and L2. The direction of CTs must be away from the grid towards the main load center.
- Wire external CTs (L1, L2) for third-party/legacy PV on the feed-in from the third-party/legacy PV. External CTs arrow direction must be away from the third-party/legacy PV aggregation panel and towards the IQ Combiner 6C.
- Use an inline splice connector to parallel the Consumption CTs and the load controller CTs.
- Wire the output leads from the inline splice connector of the CTs to the connector LC/Consumption CT at position labelled as LC/Consumption CT (position 8) on the unit.

SKUs of applicable Consumption CTs and external CTs for third-party PV/legacy PV:

- SKU: CT-200-CLAMP-2 A (two units of CTs with color-coded cables for L1, L2. Black/Red cable to monitor consumption L1, brown/purple cable to monitor L2).
- SKU: CT-200-CLAMP (two units of CTs with blue-white colored cables) can also be used.

Follow the steps to connect the Consumption CTs in parallel to the load controller CTs.

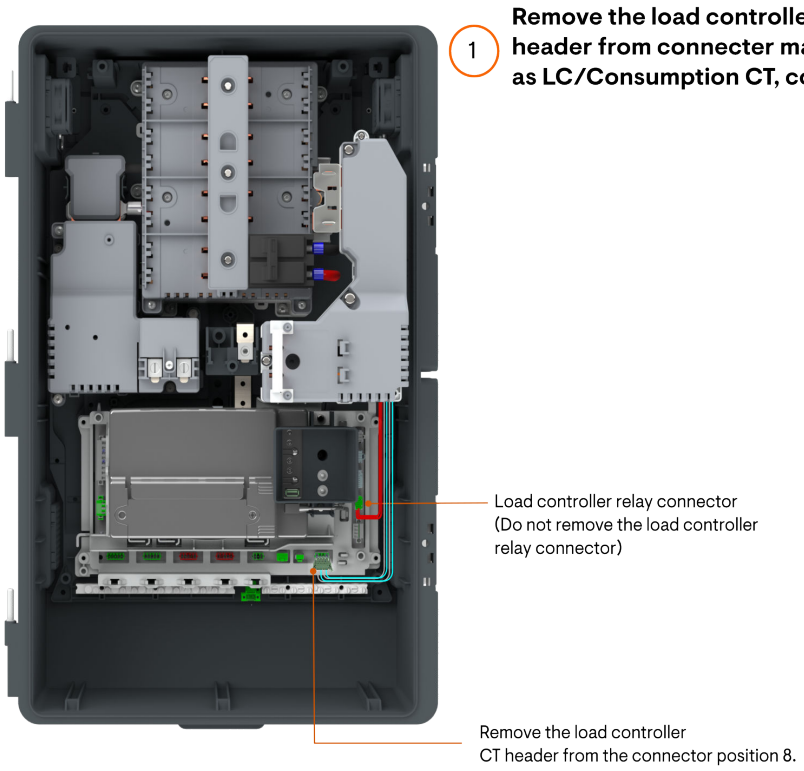

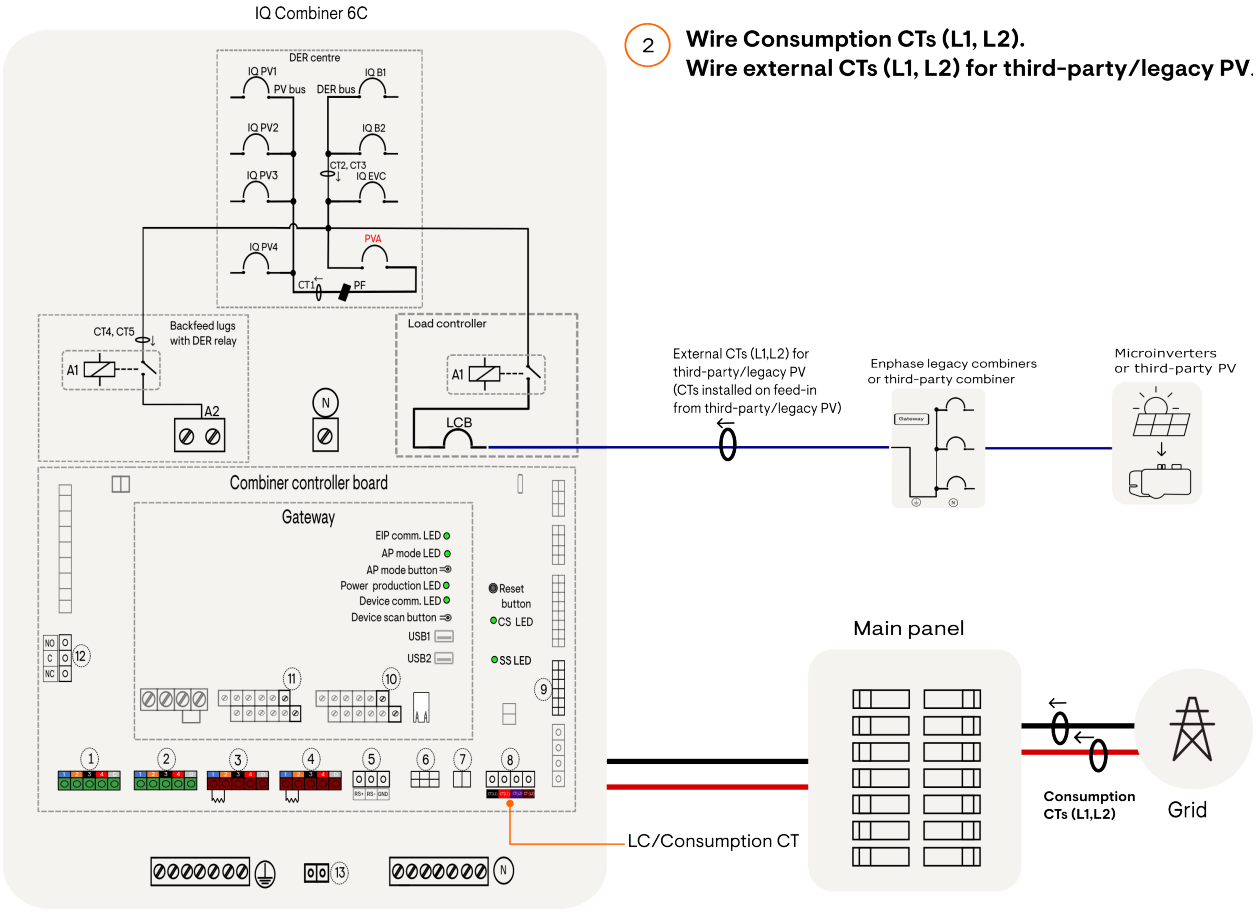

2 **Wire Consumption CTs (L1, L2).**
Wire external CTs (L1, L2) for third-party/legacy PV.

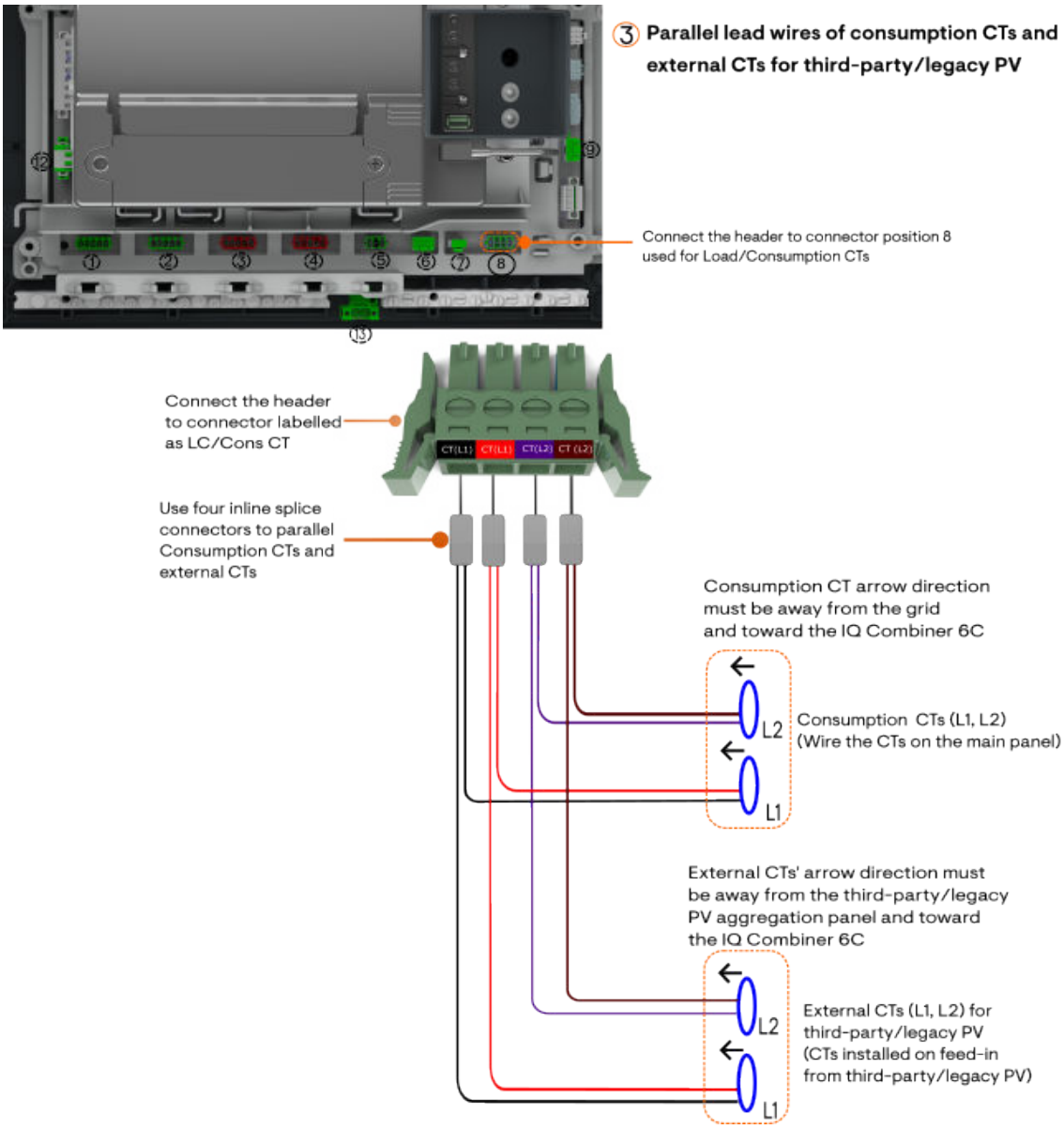
3 Parallel lead wires of consumption CTs and external CTs for third-party/legacy PV
Connect the header to connector position 8 used for Load/Consumption CTs
Connect the header to connector labelled as LC/Cons CT
CT(L1) CT(L1) CT(L2) CT (L2)
Use four inline splice connectors to parallel Consumption CTs and external CTs
Consumption CT arrow direction must be away from the grid and toward the IQ Combiner 6C
L2
L1
Consumption CTs (L1, L2) (Wire the CTs on the main panel)
External CTs' arrow direction must be away from the third-party/legacy PV aggregation panel and toward the IQ Combiner 6C
L2
L1
External CTs (L1, L2) for third-party/legacy PV (CTs installed on feed-in from third-party/legacy PV)

11. Gateway and combiner controller board connections

The IQ Gateway (X-IQ-NA-XA-ENV2-R6) and the combiner controller board (CCB) are stacked with the IQ Gateway on top. The gateway is housed in a separate casing that protects and contains the hardware.

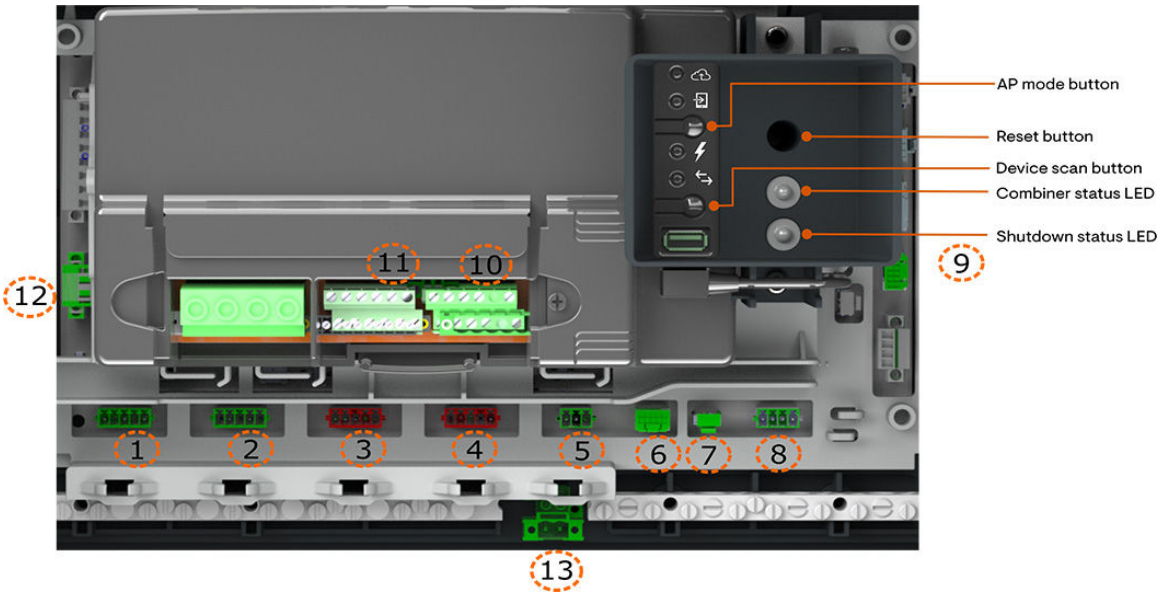

NOTE: All non-marked connections are factory connections used for internal wiring.

The following connections are available on the gateway and combiner controller board:

Connector	Connections	Wire sizes
1	Battery control header H1	Cu: 18 AWG
2	Battery control header H2	Cu: 18 AWG
3	Meter collar control header H3	Cu: 18 AWG
4	Future use control header H4	—
5	RS-485	Cu: 28-16 AWG
6	Supplemental RT power supply (for accessory)	—
7	Rope CT header (for accessory)	—
8	Load/Consumption CT connector	—
9	Load relay connector	—
10	NO dry contact relay (240 VAC, 3 A)	Cu: 28-14 AWG
11	EVSE CT	Cu: 28-16 AWG
12	NO/NC dry contact relay (120 VAC, 3 A)	Cu: 28-16 AWG
13	AC Sense (240 VAC, <1 A) - To connect an outdoor located rapid shutdown and ESS Emergency Shutdown initiator	Cu: 16-12 AWG

11.1. IQ Gateway connections

The following connections are available on the gateway; open the lid to access these connections.

P1	Do not use (used internally for PV Production CT)
P2	Do not use
S1	Do not use (used internally for battery CT)
S2	Do not use (used internally for battery CT)
S3	IQ EV Charger CT connection
DRM	Digital I/O for demand response functionality
Relay	NO (240 V,3 A)
5V0	For internal use only

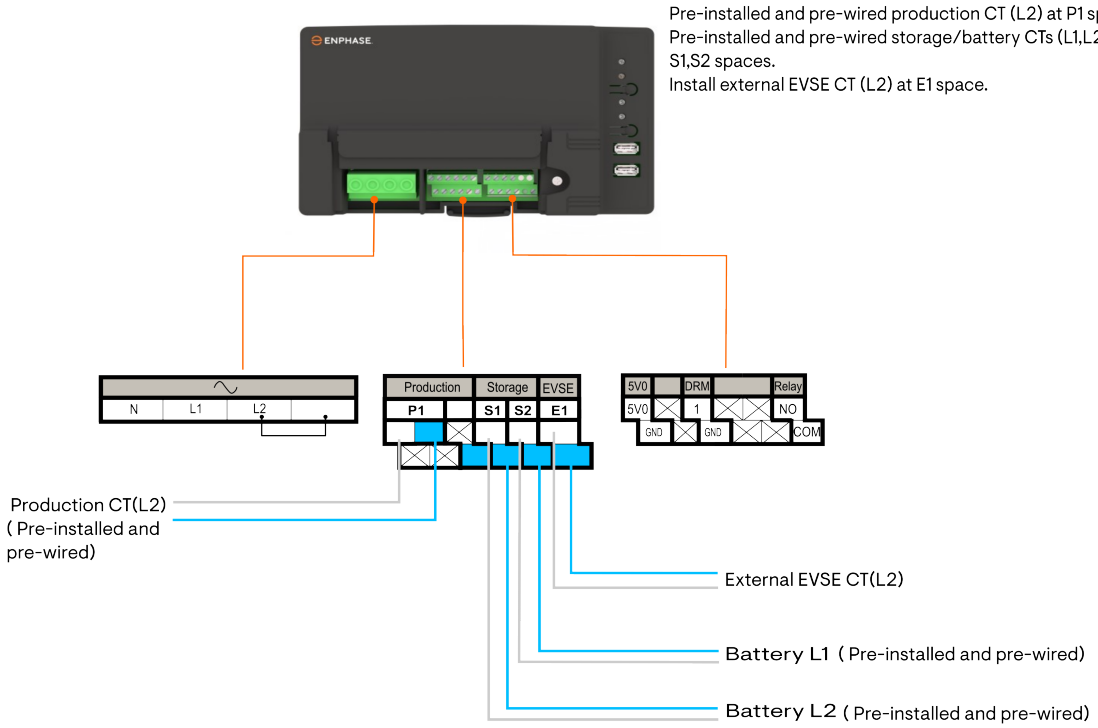

12. Wiring

12.1. IQ PV wiring

- IQ Combiner 6C supports a maximum continuous current of 80 A.
- IQ Combiner supports up to five 20 A PV branches using three double-pole breakers and one quadplex breaker at the PV4 space.
- Use copper conductors that are appropriately sized to meet local code requirements and voltage drop/rise considerations.
- PV breakers must be installed on the designated PV breaker spaces in the IQ Combiner.
- Connect L1 and L2 (usually one black and one red) from each AC branch circuit to the circuit breaker(s). Observe the L1 and L2 polarity marking at each breaker position.
- Connect the ground (green or green/yellow) to the ground bar.
- The IQ Combiner 6C includes a pre-installed 60 A PV aggregate (PVA) breaker, supporting up to three PV branch circuits.
- If using more than three PV branch circuits with a continuous rating of more than 48 A, upsize the PVA breaker to an 80/100 A breaker based on the continuous current rating of the total combined PV.
- The PV aggregate breaker can be used as a PV disconnecting means. If IQ Combiner 6C is installed at a readily accessible outdoor location, the PV aggregate breaker can be the rapid shutdown initiator. Refer to the Disconnect and rapid shutdown initiator wiring on page 43 for more details.
- Hold-down kits must be used for the breakers for PV branch circuits for grid-forming systems. The unit is pre-installed with a hold-down kit for all branch circuit breakers used within the enclosure. No external hold-down kit is required.
- Remove the hold-down kit before installing PV branch circuit breakers. Assemble the hold-down kit after installation of PV breakers.
- Production CT (L2) is integrated into the PV busbar, eliminating the need for external CT wiring. No external wiring or passing of conductors through the CT is required.
- PV aggregate breaker is connected to the PV bus using a 4 AWG wire with insulation rated for 221°F (105°C).

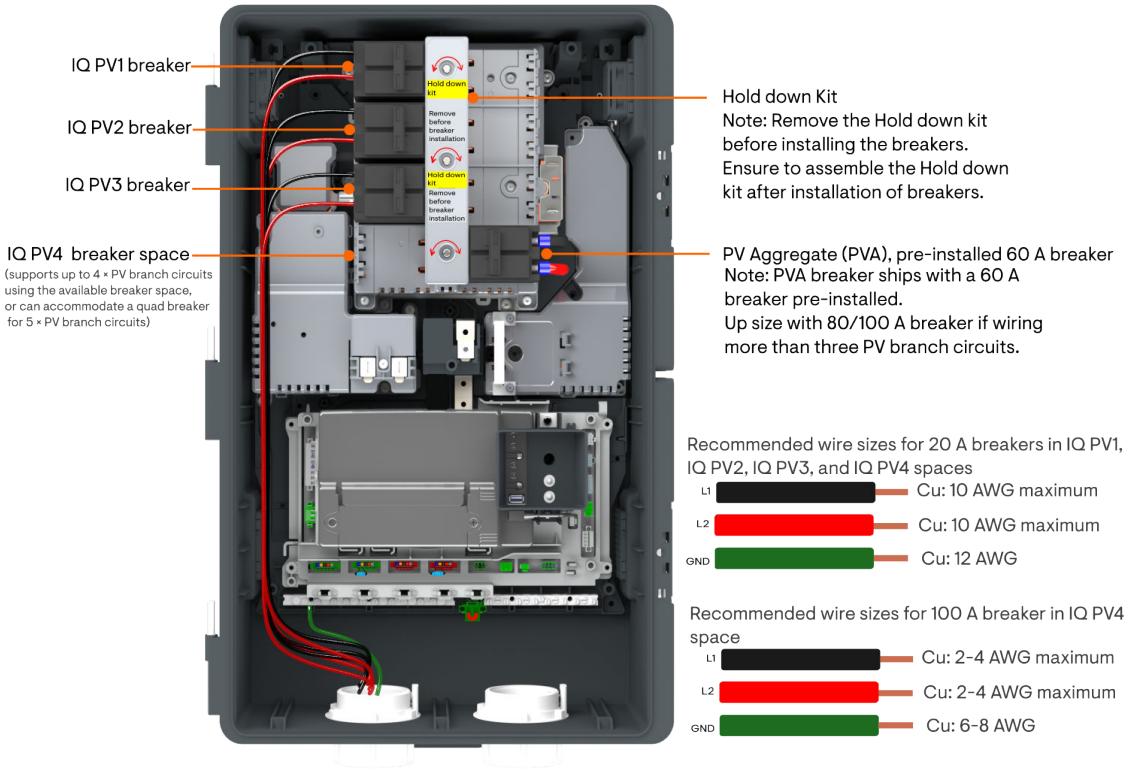

Applicable breakers for the three PV branch circuits on PV 1/2/3 space	
Eaton (BR2xx/BR2xxB[5])	xx: 10/15/20 A
Siemens (Q2xx)	xx: 10/15/20 A
ABB/GE (THQL21xx)	xx: 15/20 A

- If an external panel board to combine PV branch circuits is used, connect it at the PV4 space with an appropriately sized breaker.
- PV4 space supports up to a 100 A maximum breaker size.
- If the continuous PV ratings exceed 48 A, make sure to upsize the PVA breaker accordingly.

Applicable breaker for PV 4 space	
Eaton (BR2xx/BR2xxB[5])	xx: 10/15/20/40/60/80/100 A
Siemens (Q2xx)	xx: 10/15/20/40/60/80/100 A
ABB/GE (THQL21xx)	xx: 15/20/25/30/35/40 A
Eaton quad (BQC2xx2xx, BRDC2xx2xx)	xx: 15-15/20-20 A
Siemens (Q2xxxxCT, Q2xxxxCT2)	xx: 15-15/20-20 A

NOTE: Quad breaker is only supported at the IQ PV4 space.

Applicable breaker for PVA	
Eaton (BR2xx/BR2xxB[5])	xx: 60/80/100 A

NOTE: Must ensure to connect IQ PV only to the designated marked breaker spaces. Failure to do so may void warranty clauses.

NOTE: Do not connect loads at any of the PV/DER breaker spaces[6].

NOTE: PV4 can be used to connect a 20 A individual breaker, a quad breaker (2 × 20 A), or an external combiner rated up to 100 A. If PV4 is fully utilized with a 100 A breaker for aggregating an external Enphase legacy combiner, then PV1, PV2, and PV3 must not be used. Ensure that the combined output current from PV1, PV2, PV3, and PV4 does not exceed the PV busbar rating of 100 A.

NOTE: Follow NEC for the selection of wire gauges; also refer to the breaker manufacturer's guidance for breaker-specific wire gauges.

NOTE: Use only copper conductors rated for a minimum of 194°F (90°C).

NOTE: Ensure to follow local codes for selecting the correct wire gauges.

NOTE: Ensure to adhere to the minimum wire bending space requirements. If the bending space is insufficient for wiring on the ground bars, use cross conduits for their wiring.

NOTE: Recommended to use the wiring clips attached to the enclosure for cable management when routing wires on the PV side of the enclosure.

5 A tapped molded opening for the hold-down kit is not required; the combiner enclosure already includes an integrated hold-down kit in the designated space.
6 PV breaker spaces - IQ PV 1/IQ PV 2/IQ PV 3/IQ PV 4. DER breaker spaces - IQ Battery 1/IQ Battery 2/IQ EV Charger/PVA.

NOTE: X-IQ-AM1-240-6C-3BRK is shipped with two pre-installed 20 A breakers for PV circuits and one pre-installed 40 A breaker for the battery circuit.

12.2. IQ Battery wiring

- IQ Battery breakers must be installed on designated breaker spaces in the IQ Combiner.
- Use copper conductors sized to meet local code requirements and voltage drop/rise considerations.
- Bring in the wires (L1, L2, N) from the IQ Batteries.
- Connect the ground (green or green/yellow) to the ground bar.
- Connect L1 and L2 (usually one black and one red) from the IQ Battery to the circuit breaker(s). Observe the L1 and L2 polarity marking at each breaker position.
- Hold-down kits must be used for the breakers for battery branch circuits for grid-forming systems. The unit is pre-installed with a hold-down kit for all branch circuit breakers used within the enclosure. No external hold-down kit is required.
- Remove the hold-down kit before installing the IQ Battery circuit breakers. Assemble the hold-down kit after installation of the IQ Battery breakers.
- Battery CTs (L1, L2) are integrated into the DER busbar, eliminating the need for external CT wiring. No external wiring or passing of conductors through CTs is required.

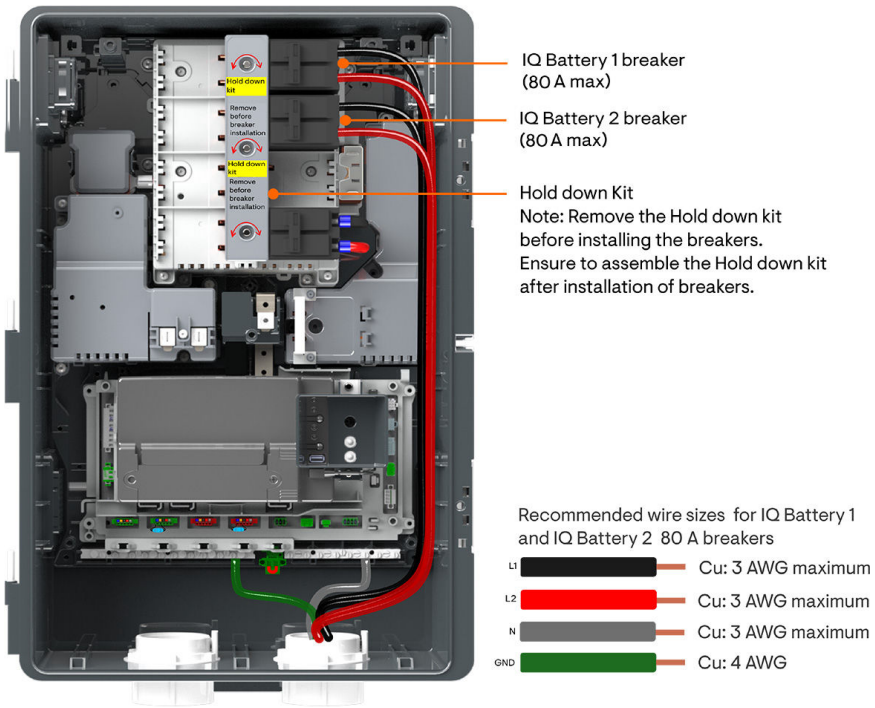

NOTE: IQ Combiner 6C is only compatible with IQ Battery 10C.

Applicable breaker for IQ Battery 1 and 2	
Eaton (BR2xx/BR2xxB[5])	xx: 40/80 A
Siemens (Q2xx)	xx: 40/80 A
ABB/GE (THQL21xx)	xx: 40 A

NOTE: Must ensure to connect the IQ Battery to the designated marked breaker spaces. Failure to do so may void warranty clauses.

NOTE: Do not connect loads at any of the PV/DER breaker spaces[7].

NOTE: Follow NEC for the selection of wire gauges; also refer to the breaker manufacturer's guidance for breaker-specific wire gauges.

NOTE: Use only copper conductors rated for a minimum of 194°F (90°C).

NOTE: Ensure to follow local codes for selecting the correct wire gauges.

NOTE: Ensure to adhere to the minimum wire bending space requirements. If the bending space is insufficient for wiring on the neutral and ground bars, use cross conduits for their wiring.

NOTE: Recommended to use the zip ties for cable management when routing wires on the battery/EVSE side of the enclosure.

NOTE: X-IQ-AM1-240-6C-3BRK is shipped with two pre-installed 20 A breakers for PV circuits and one pre-installed 40 A breaker for the battery circuit.

12.3. IQ EV Charger wiring

- Use copper conductors sized to meet local code requirements and voltage drop/rise considerations.
- Bring in the wires (L1, L2) from the IQ EV Charger.
- Connect the ground (green or green/yellow) to the ground bar.
- The IQ EV Charger breaker must be installed on the designated breaker spaces in the IQ Combiner 6C.

[7] PV breaker spaces - IQ PV 1/IQ PV 2/IQ PV 3/IQ PV 4. DER breaker spaces - IQ Battery 1/IQ Battery 2/IQ EV Charger/PVA.

- The unit is pre-installed with a hold-down kit for all branch circuit breakers used within the enclosure. No external hold-down kit is required.
- Remove the hold-down kit before installing the IQ EV Charger circuit breaker. Assemble the hold-down kit after installation of the IQ EV Charger breaker.
- External CT (L2) needed for the IQ EV Charger must be wired to EVSE CT connector number 11 on the gateway; connections on the gateway can be accessed after opening the connector lid.
- EVSE CT is not shipped within the enclosure. Procure a unit of clamp CT (CT-200-CLAMP) or split CT (CT-200-SPLIT) separately.
- The direction of the CT must be away from the EVSE and towards the IQ Combiner 6C.

EVSE sizing guidelines

For IQ EV Charger installations, the EV charger's nameplate rating must be less than or equal to the battery's nameplate rating.

If the EVSE nameplate rating exceeds the battery's nameplate rating (up to a maximum of 80 A), it must be connected either to the load controller breaker or to the panel fed by the load controller breaker.

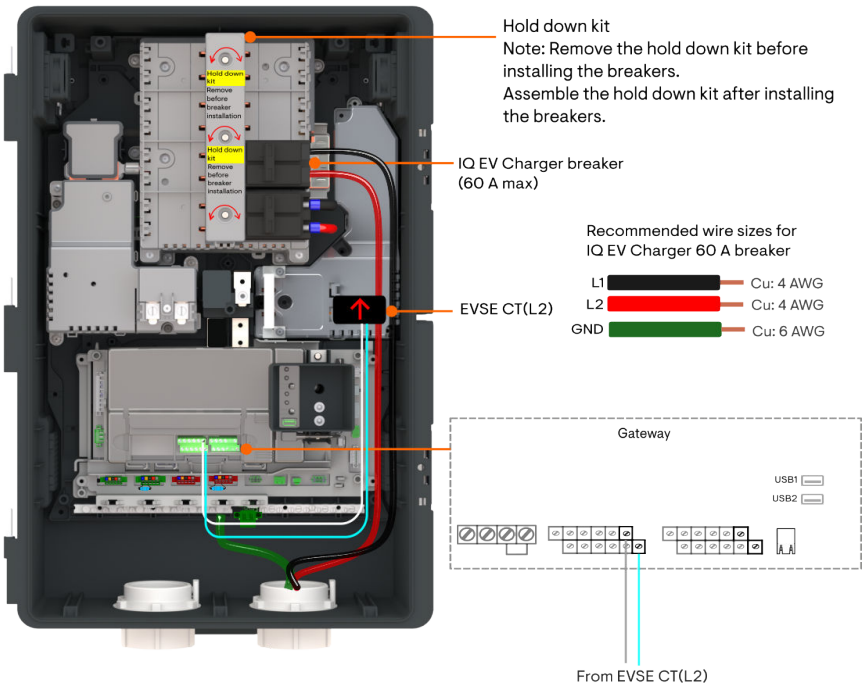

NOTE: Only Enphase IQ EV Chargers are supported at the EVSE breaker space.

Applicable breaker for IQ EV Charger	
Eaton (BR2xx/BR2xxB[5])	40/50/60 A
Siemens (Q2xx)	40/50/60 A
ABB/GE (THQL21xx)	xx: 40 A

NOTE: Must ensure to connect the IQ EV Charger to the designated marked breaker spaces. Failure to do so may void warranty clauses.

NOTE: Do not connect loads at any of the PV/DER breaker spaces[8].

NOTE: Wire gauges are specified based on the wire-bending space requirements in the National Electrical Code. Follow NEC for the selection of wire gauges; also, refer to the breaker manufacturer's guidance for breaker-specific wire gauges.

NOTE: Use only copper conductors rated for a minimum of 194°F (90°C).

NOTE: Ensure to follow local codes for selecting the correct wire gauges.

NOTE: Ensure to adhere to the minimum wire bending space requirements. If the bending space is insufficient for wiring on the neutral and ground bars, use cross conduits for their wiring.

NOTE: Recommended to use the zip ties for cable management when routing wires on the battery/EVSE side of the enclosure.

12.4. Integrated load controller wiring

The integrated load controller within IQ Combiner 6C allows users to connect and configure additional loads. The integrated load controller also facilitates load monitoring and control. If not used to connect additional loads, load controllers can also be used to connect third-party PV systems or Enphase systems using the space.

- Helps avoid extra costs if NEC 2023 702.4 (A) or 710.15 (A) requires a larger system size.
- Supports up to one 80 A, double-pole breaker.
- IQ Combiner 6C supports a maximum continuous current of 64 A.
- It also includes an integrated current transformer for monitoring purposes.
- Includes integrated hold-down kit.

[8] PV breaker spaces - IQ PV 1/IQ PV 2/IQ PV 3/IQ PV 4. DER breaker spaces - IQ Battery 1/IQ Battery 2/IQ EV Charger/PVA.

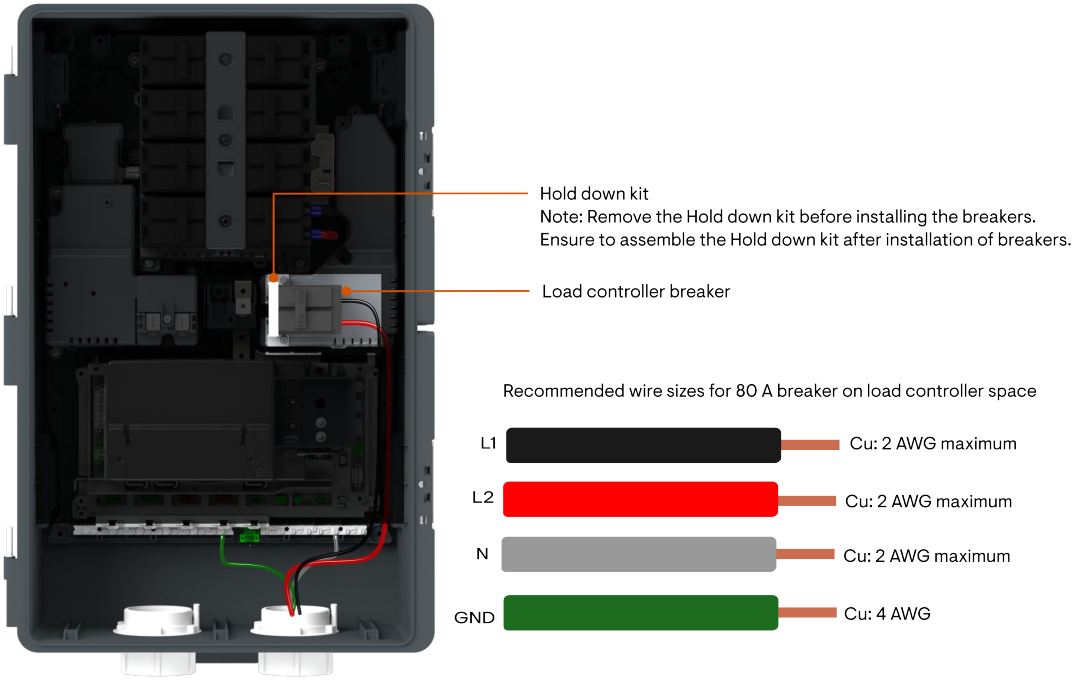

- Install a breaker of up to 80 A in the load controller space.
- Connect L1 and L2 from the load control breaker to a non-backed-up load panel using a breaker or lugs on the load panel.
- The unit comes pre-installed with a hold-down kit for all branch circuit breakers used within the enclosure. No external hold-down kit is required.

Applicable breaker for the load controller space	
Eaton (BR2xx/BR2xxB[5])	xx: 10/15/20/25/30/35/40/45/50/60/70/80 A
Siemens (Q2xx)	xx: 10/15/20/25/30/35/40/45/50/60/70/80 A
ABB/GE (THQL21xx)	xx: 15/20/25/30/35/40 A
Eaton quad (BQC2xx2xx, BRDC2xx2xx)	xx: 15-15/20-20 A
Siemens (Q2xxxxCT)	xx: 15-15/20-20 A
Eaton quad (BQ2xx2xx)	xx: 15-15/20-20/40-40/30-50
Siemens (Q2xxxxCT2)	xx: 15-15/20-20/40-40/30-50 A

NOTE: IQ EV Charger or third-party EVSE can be connected at the load controller space.

NOTE: Wire gauges are specified based on the wire-bending space requirements in the National Electrical Code. Follow NEC for the selection of wire gauges; also, refer to the breaker manufacturer's guidance for breaker-specific wire gauges.

NOTE: Use only copper conductors rated for a minimum of 194°F (90°C).

NOTE: Ensure to follow local codes for selecting the correct wire gauges.

NOTE: Ensure to adhere to the minimum wire bending space requirements. If the bending space is insufficient for wiring on the neutral and ground bars, use cross conduits for their wiring.

NOTE: Recommended to use the zip ties for cable management when routing wires for the load controller.

NOTE: The relays on the load controller are shipped in the open state. To enable load support, the system must be fully commissioned. Any loads connected to the load controller will not function until commissioning is complete. Ensure the system is commissioned before leaving the site.

12.5. Backfeed wiring

- Ensure that all control and CT wiring is connected to the terminals before making any backfeed connections.
- Install a breaker on the back-fed main panel for connecting the IQ Combiner 6C.
- Connect the L1 and L2 outputs from the mains lugs on the IQ Combiner to the installed breaker on the main panel/backfeed panel.
- Connect the neutral wire to the lugs for backfeed wiring. Attach the ground wire to the ground bar.

NOTE: Aluminum has lower conductivity than copper; size the wires accordingly based on conductor conductivity. Follow the NEC and local electrical codes for all final wire sizing and ampacity derating guidelines.

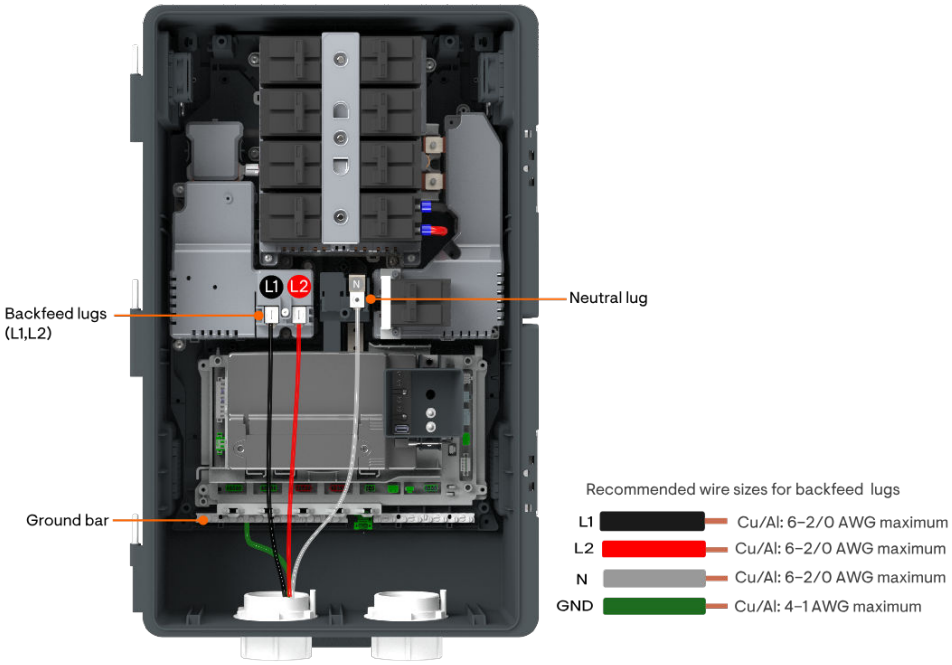

NOTE: Maximum wire gauges are specified based on the wire sizes that can be accommodated by lugs and bars.

NOTE: Follow NEC for the selection of wire gauges; also refer to the breaker manufacturer's guidance for breaker-specific wire gauges.

NOTE: Use only copper/aluminum conductors rated for a minimum of 194°F (90°C).

NOTE: Follow local codes for selecting the correct wire gauges.

NOTE: Adhere to the minimum wire bending space requirements. If the bending space is insufficient for wiring on the neutral and ground bars, use cross conduits for their wiring.

12.6. Auxiliary relays wiring

- The combiner controller board features NO/NC relay contacts for connection to a contactor auxiliary circuit.
- Dry contact relays:1 x NO/NC (120 VAC, 3 A, 3-pin); copper wire: 28–16 AWG. Coil inrush must stay under 3 A.
- An auxiliary relay can be used to shed loads.
- An external contactor with an auxiliary contact can be used to connect to the loads.
- Select a contactor with a 120 VAC coil to ensure compatibility with the auxiliary relay rating.
- Use a normally-open contactor, so loads drop on loss of control power. Contactor continuous rating ≥125% of the load continuous current.
- Refer to Appendix E for list of contactors suitable for load shedding purpose.

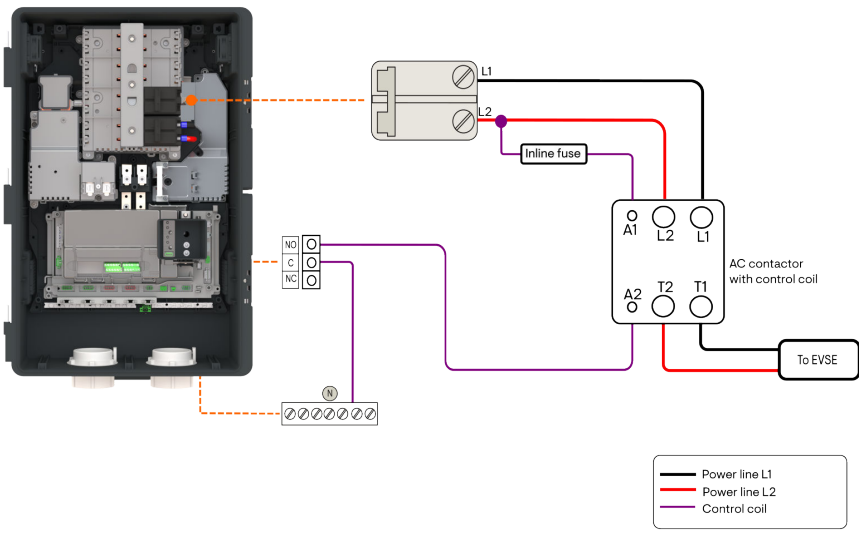

Figure 1: Auxiliary relay wiring using the combiner controller board to control an EVSE

NOTE: Use an inline fuse with the AC contactor. Size it for coil inrush (1–3 A) and place it in the coil hot leg only, never in neutral.

NOTE: Ensure that the wiring is connected only to the NO (normally open) terminals when load shedding is required during microgrid formation.

NOTE: The NO/NC auxiliary contact is a voltage-free (dry) contact and does not provide power to the contactor coil; the coil shall be powered by an external 120 VAC supply, with the NO/NC contacts switching the coil circuit.

12.7. Third party or Enphase additional/legacy PV wiring

Third-party PV or Enphase additional/legacy PV systems can be connected to the load controller port in the IQ Combiner 6C.

Connecting an Enphase PV system to this port results in a system with two Gateways.

Install a PLC filter in all systems with two or more gateways, including gateways integrated in a combiner or standalone gateways. For more details on PLC filter installation refer to Appendix C

For more details on conduit seperation, refer to Appendix C.

NOTE: Separate conduits are required for running wires for both gateways.

External CTs installation:

- Systems using an IQ Meter Collar for Whole Home backup and monitoring do not require external CTs on the Load Controller monitoring port for monitoring third-party PV or Enphase legacy PV systems.
- For Partial Home backup systems with Whole Home monitoring or grid-tied systems using external Consumption CTs, install the third-party PV monitoring CTs in parallel with the Whole Home monitoring CTs to support both monitoring functions.

Refer to the Consumption CTs wiring section for more details

NOTE: Do not wire a mix of PV and load on the same load controller breaker spot.

NOTE: If the additional load control is required, refer to the auxiliary wiring section

NOTE: If the continuous PV current exceeds 80, connect the additional PV capacity at the load controller location and install an additional gateway. A PLC filter must be installed between the two gateways to ensure proper communication and system operation.

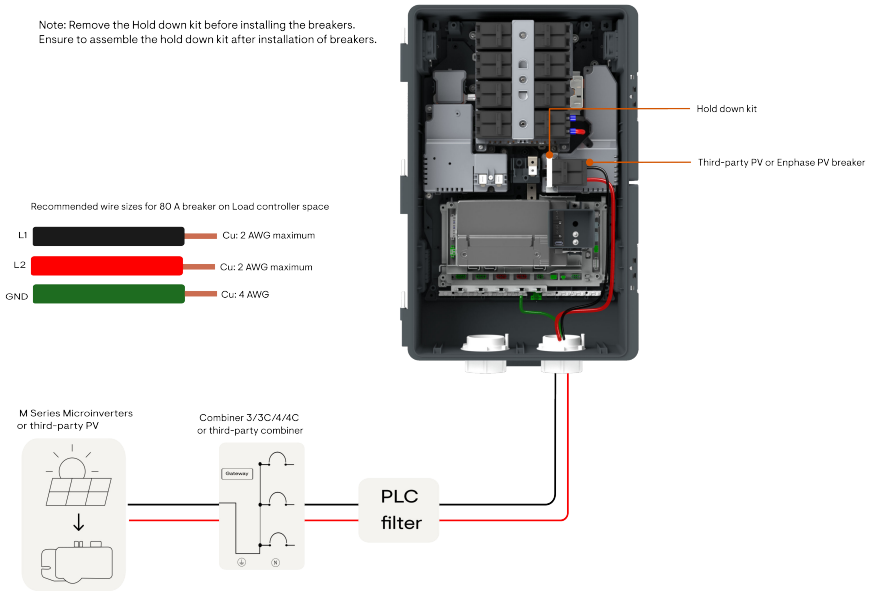

12.8. Disconnect and rapid shutdown initiator wiring

The PV aggregate breaker can be used as a PV rapid shutdown, ESS Emergency Shutdown, or PV system disconnecting means. However, if the IQ Combiner 6C is not installed in a readily accessible outdoor location, or if regulations require a visible blade disconnect, consider installing an external disconnect serving as PV rapid shutdown, ESS Emergency Shutdown, PV System disconnecting means, and ESS disconnecting means.

Options for installation of disconnects:

- Grid side disconnect
- PV disconnect in line with the PV aggregate breaker
- PV disconnect in line with external combiner (2-Pole)
- PV disconnect in line with external combiner (3-Pole)

Installed disconnects can function as PV rapid shutdown, ESS Emergency Shutdown, PV system disconnection, or ESS disconnection, depending on the installed configuration. Refer to NEC and utility-compliant disconnect options on page 52 for more details.

For the generally available model numbers of disconnects, refer to 3-pole disconnect models on page 54 and 2-pole disconnect models on page 54.

Before connecting a disconnect or a rapid shutdown initiator to the system, ensure the following.

1. Turn OFF the PV aggregate breaker.
2. Turn OFF the IQ PV, IQ Battery, IQ EV Charger, and the load controller breakers.
3. Turn OFF the DC switches in the battery.
4. Ensure the shutdown status LED on the unit is OFF.
5. Turn OFF the backfeed breaker in the panel.

12.8.1 Grid-side disconnect

- The 3-pole disconnect is placed between the IQ Combiner 6C and the utility grid. The two poles of the disconnect are connected on the backfeed to the main panel/backfeed panel, with the third pole connected to the AC sense header.
- IQ Combiner 6C is shipped with a pre-installed jumper wire connected to the AC sense header. Remove the wire from the AC sense header before connecting an external grid-side disconnect.
- A 2-pole disconnect with an additional auxiliary contact can also be used as a grid-side disconnect; auxiliary contacts can be connected to the AC sense header.
- The AC sense header is rated for 240 VAC and draws a maximum current of less than 1 A.
- AC sense header accommodates up to 12 AWG maximum; use wire connectors for converting higher gauge wires to lower gauge as needed.
- When using a grid-side disconnect, match the disconnect rating to the back-fed breaker rating and ensure compliance with local and national codes and standards.
- Installing a grid side disconnect functions such as PV rapid shutdown, ESS Emergency Shutdown, PV system disconnection, or ESS disconnect means. Refer to the Disconnect and rapid shutdown initiator wiring on page 43 for more details.
- For the generally available model number of disconnects, refer to the 3-pole disconnect models on page 54.

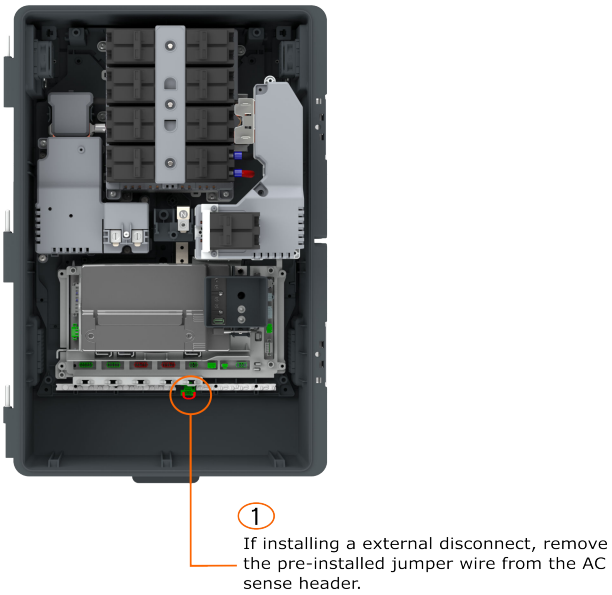

Grid side disconnect

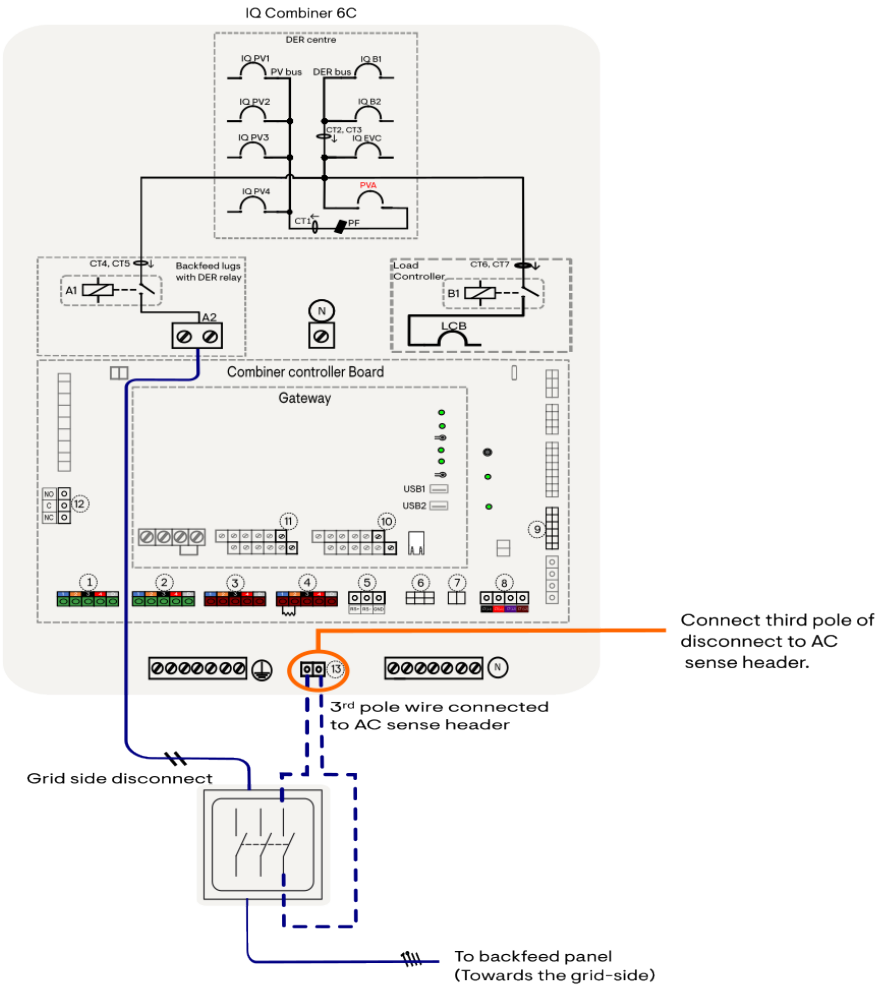

NOTE: Ensure that the AC sense header mounted on the enclosure remains secure. First, wire the disconnect to the receptacle, and then confirm that it is properly fastened to the header.

NOTE: The maximum wiring length between 3-pole grid side disconnect and AC sense header must not exceed 500 feet (150 meters).

12.8.2 PV disconnect in line with the PV aggregate breaker

- A 2-pole disconnect is used as a PV disconnect, which is connected in line with the PVA breaker. For the generally available model numbers of disconnects, refer to 2-Pole disconnect models.
- IQ Combiner 6C is shipped with a pre-installed wire connected to a 60 A PV aggregate breaker. Remove the wire from the PV aggregate breaker before connecting an external PV side disconnect.
- Use an insulated inline splice connector to extend the PV aggregate wires to the PV side disconnect. Loop the wires from the PV side disconnect back to the PV aggregate breaker.
- When using an in-line PV disconnect, match the disconnect rating to the aggregate PV breaker rating and ensure compliance with local and national codes and standards.
- Installation of a PV disconnect in line with the PVA breaker serves as PV rapid shutdown, ESS Emergency Shutdown, and PV system disconnecting means. Refer to NEC and utility-compliant disconnect options on page 52 for more details.

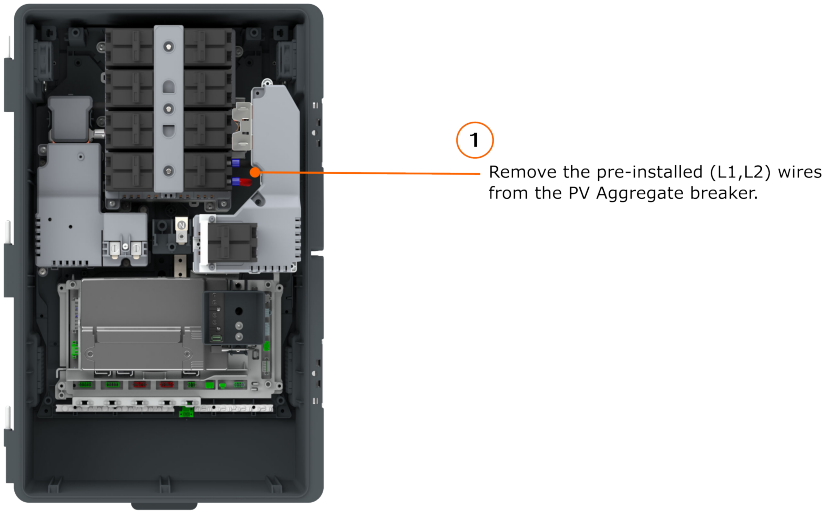

PV disconnect inline with PV aggregate breaker

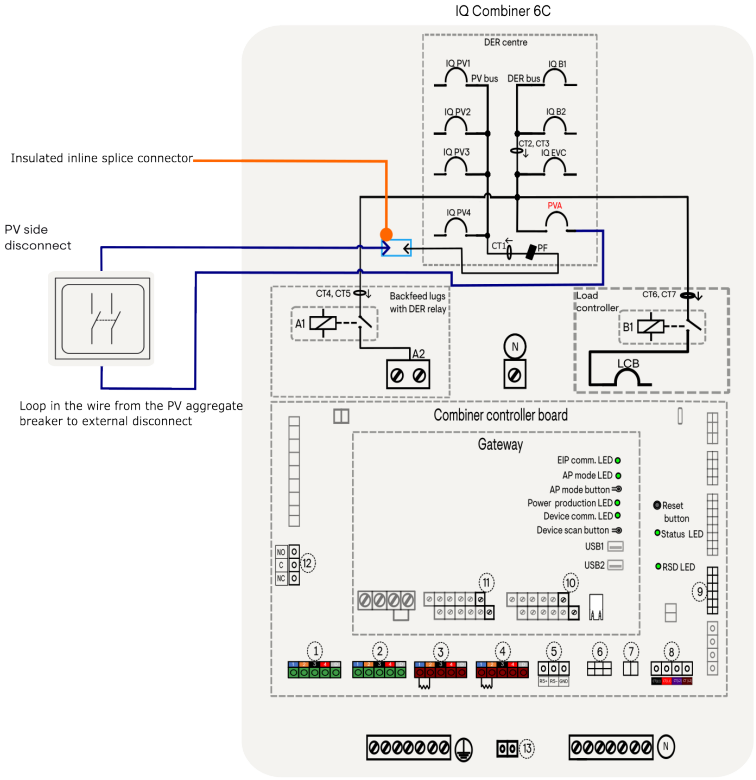

NOTE: Make sure the voltage drop at the PVA terminals does not exceed 5 V, as a higher drop may cause unintended RSD activation. Refer to Appendix D for more details.

12.8.3 PV disconnect in line with external combiner (2-Pole)

- The 2-pole disconnect is placed between the IQ Combiner 6C and the external combiner, with the external combiner aggregation landing on PV4 spaces within the IQ Combiner 6C.
- When using an in-line PV disconnect, match the disconnect rating to the aggregate PV breaker rating and ensure compliance with local and national codes and standards.
- Installing a 2-pole PV disconnect in line with external combiner functions, such as PV rapid shutdown and PV system disconnect means. Refer to NEC and utility-compliant disconnect options on page 52 for more details.
- For the generally available model numbers of disconnects, refer to the 2-Pole disconnect models.

PV disconnect inline with external combiner (2-pole)

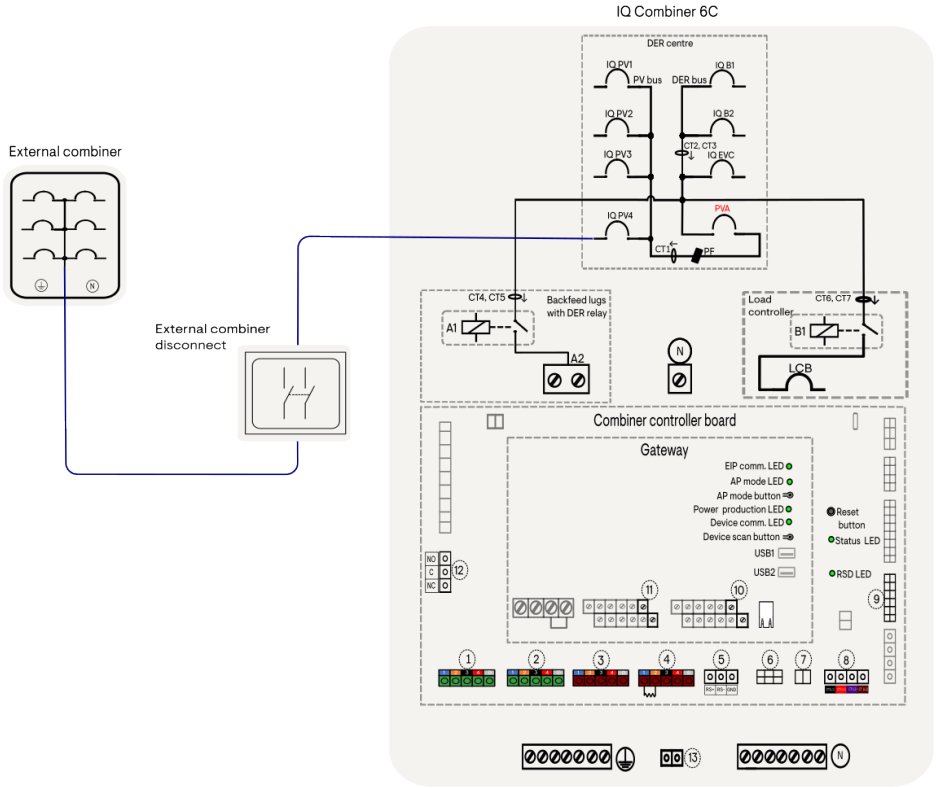

12.8.4 PV disconnect in line with external combiner (3-Pole)

- The 3-Pole disconnect is placed between the IQ Combiner 6C and the external combiner, with the external combiner aggregation landing on PV4 spaces within the IQ Combiner 6C; the third pole of the disconnect is connected to the AC sense header in the IQ Combiner 6C.
- When using an in-line PV disconnect, match the disconnect rating to the aggregate PV breaker rating and ensure compliance with local and national codes and standards.
- Installing a 3-pole PV disconnect in line with external combiner functions as PV rapid shutdown and PV system disconnecting means, and ESS Emergency Shutdown. Refer to NEC and utility-compliant disconnect options on page 52 for more details.
- For the generally available model number of disconnects, refer to 3-pole disconnect models on page 54.

PV disconnect inline with external combiner (3-pole)

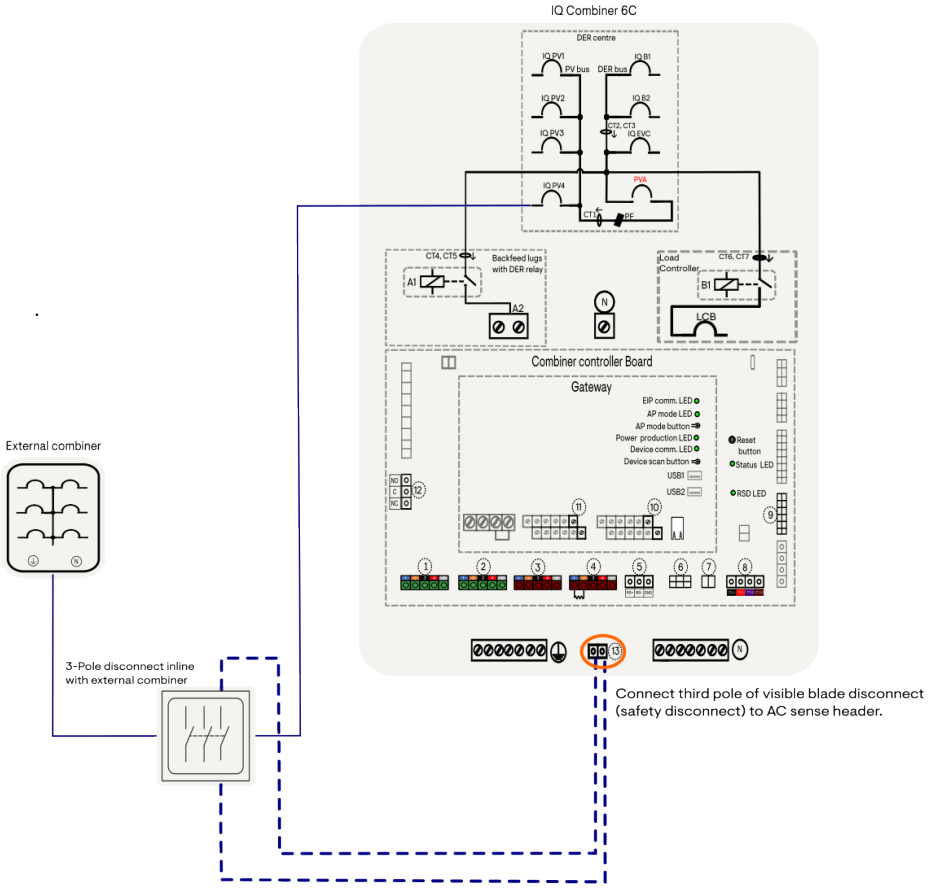

NOTE: Make sure the voltage drop at the PVA terminals does not exceed 5 V, as a higher drop may cause unintended RSD activation. Refer to Appendix D for more details.

12.8.5 Enphase System Shutdown switch (applicable only for grid-forming - backup systems)

Use the Enphase system shutdown switch and connect it to the AC sense header in the Combiner 6C.

- Wire the AC sense header to the L1 and T1 terminals on the system shutdown switch.

CAUTION: This switch has two pairs of terminals, with each diagonally opposite pair forming a common pole. The AC sense wires must be connected to a diagonally opposite pair (e.g., L1 and T1). Do not connect the wires to adjacent terminals, as those belong to the same side of the switch and will cause improper operation.

- Use 12-14 AWG cable for wiring between the AC sense header and the SSD switch.

NOTE: The maximum wiring length between the SSD switch and the AC sense header must not exceed 200 feet (60 meters).

WARNING: Ensure precise cable stripping and clean termination at the AC sense header. Any stray strands or exposed wire causing a short will instantly blow the CCB fuse, rendering the entire system inoperable.

The AC sense header connected to the switch is not touch-safe and is not intended for powering any external load. It incorporates internal fuses rated at 600 VAC RMS and 1.25 A, providing protection against fault conditions. As a result, no additional external overcurrent protection is required for the sense circuit.

The System Shutdown Switch must not be used as the sole means of isolation during maintenance. Always ensure that turning OFF this switch is accompanied by opening all DER breakers, PV breakers, and battery breakers in the IQ Combiner 6C for maintenance.

The System Shutdown Switch must always be installed in an outdoor, visible, and readily accessible location.

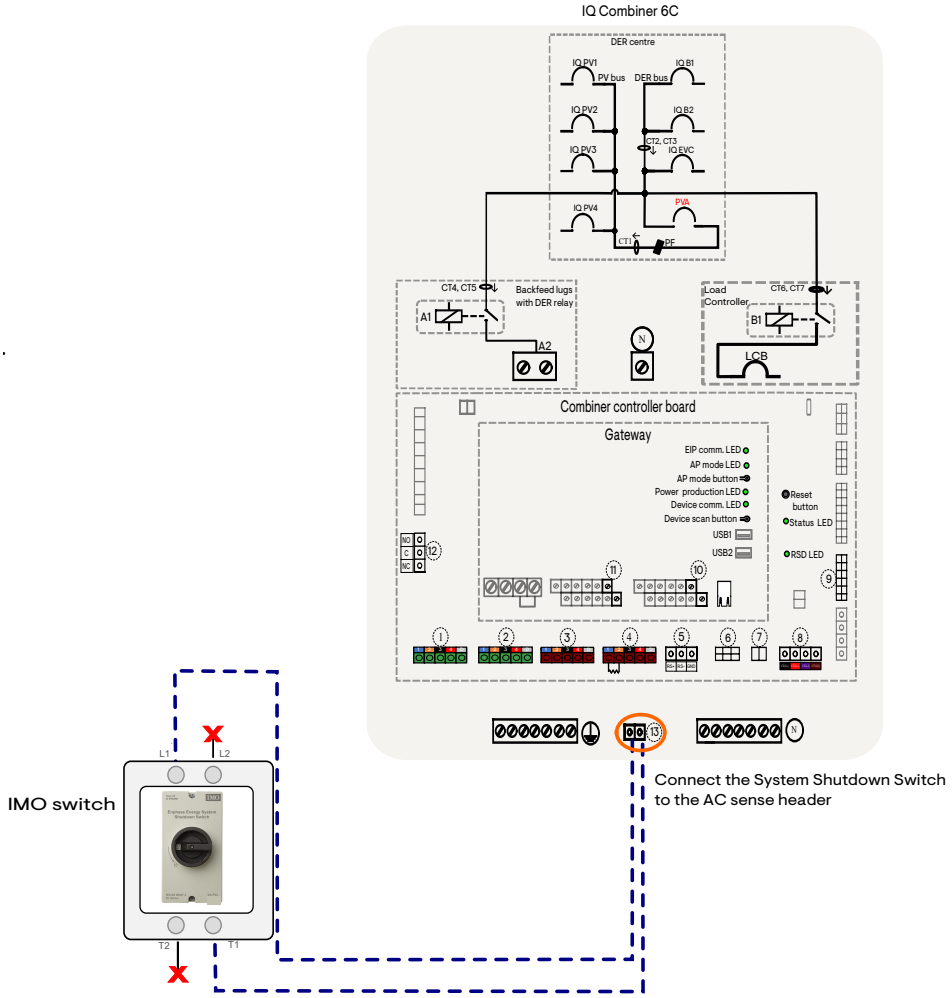

System Shutdown Switch from IMO Precision Controls Ltd. can be used for both AC and DC applications, as it is OEM-certified and UL-approved (up to 600 VAC/16 A), confirming its suitability for system shutdown functionality.



IMO

To whom it may concern.

Subject: IMO P/N: SI16-PEL64R-2-ENP

IMO Precision Controls Ltd.
The Interchange
Frobisher Way
Hatfield
Hertfordshire
AL10 9TG

We IMO, hereby declare that the Si16-PEI64R-2-ENP is UL approved to 600v AC/16amps. Any loads below these ratings are covered and ok to use, based on the self-cleaning contact design. Customer can choose to cover the "DC-PV2" marking in the field when used with AC voltages within the aforementioned rating to avoid confusion in the field.

Joe Duignam
Quality Manager
IMO Precision Controls Ltd.
11 March 2026.

NOTE: Ensure to cover the DC-PV2 marking as stated by the manufacturer

Other options to connect a System Shutdown Switch is listed in the Enphase Energy System shutdown with IQ Battery 10C, IQ Combiner 6C, and IQ Meter Collar techbrief.

13. LEDs and push buttons

The IQ Gateway has four LEDs. The LEDs provide critical information about site health. The status of LEDs helps troubleshoot any issues during site commissioning or after the site is operational.

The combiner controller board includes two LEDs: a combiner status LED and a shutdown status LED. The IQ Combiner 6C continuously monitors the RSD mechanism to ensure its proper function.

The IQ Combiner 6C includes a reset button to reset the IQ Gateway and the combiner controller board on a per-need basis.

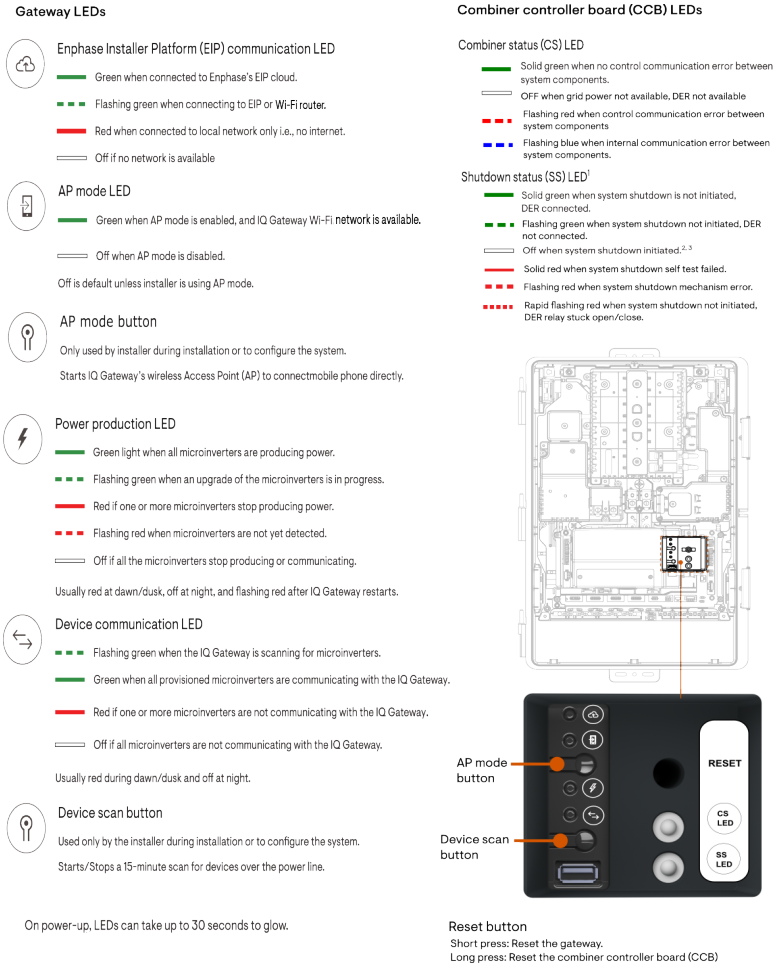

[1] The shutdown status (SS) LED may act as the rapid shutdown and emergency shutdown indicator, depending on the system configurations used.
[2] LED transitioning to the OFF state during system shutdown applies only to grid-forming systems.
[3] For grid-tied (non-backup) systems, the System shutdown (SS) LED may remain ON or turn OFF, depending on the type of disconnect used (grid disconnect, PV disconnect, or PVA) for rapid or emergency shutdown.

NOTE: On power-up, LEDs can take up to 30 seconds to glow.

NOTE: The LED transitioning to the OFF state during a system shutdown applies only to grid-forming systems. In grid-tied (non-backup) systems, the System shutdown (SS) LED may either remain ON or turn OFF, depending on the specific type of disconnect used, such as a grid disconnect, PV disconnect, or PVA used for rapid or emergency shutdown.

NOTE: For all error states in which the LED flashes red, contact Enphase Support.

14. Setting up Enphase Power Control (EPC)

Introduction to Enphase's Power Control (EPC)

The Enphase Energy System supports four Enphase Power Control (EPC) use cases:

- MPU avoidance with Busbar Overload Control (BBoC): This feature allows maximum renewable energy generation and helps avoid the cost of panel upgrade to large PV and battery systems under National Electric Code (NEC) 2020 705.13, reducing the system payback period. This feature is typically always recommended to be enabled for IQ Combiner 6C and IQ Battery 10C installations.
- IQ Battery oversubscription mode: This feature limits the charge/discharge current and enables more battery capacity to be installed in grid-tied systems. The feature ensures that the total continuous output current from the batteries does not exceed 80% of the battery breaker rating.
- Aggregate power export limit: This feature ensures that the aggregate power exported to the grid is limited to the aggregate power export limit (PEL) defined by the installer.

- Battery import/export only mode: The battery import-only feature ensures the Enphase IQ Battery never exports any power to the grid. The battery export-only feature ensures that the Enphase IQ Battery never imports any power from the grid but can export to the grid. Enphase IQ Battery can operate either in battery import-only mode or battery export-only mode.

IQ Combiner 6C model	Product name	Maximum units of IQ Battery 10C	Maximum energy (kWh)	Maximum power (kW)
X-IQ-AM1-240-6C	IQ Combiner 6C	8[9]	80	30.72

14.1. Setting up Enphase Power Control on-site during commissioning

- Ensure availability of the following Enphase products, as required, on-site to implement EPC:

Product	Model
IQ Combiner 6C	X-IQ-AM1-240-6C
IQ Battery 10C	IQBATTERY-10C-1P-NA
Microinverters	IQ8 Series

- Installation of the CTs: Based on the type of system (grid-forming or grid-tied) and the EPC feature being enabled, the CT type and location may change.
  In IQ Combiner 6C, both PV and Battery CTs are pre-wired in the combiner from the factory, and no field wiring is required. Based on the system configuration, installation of the Consumption CT or IQ Meter Collar or both may be required. Refer to system configurations for more details.

CT type	SKU	Quantity	Location	Conductor measured	Direction of arrow
Consumption CT	CT-200-CLAMP-2 A	2 units in the SKU	In the main panel	Conductor to the main panel from the utility meter	Towards the main panel, away from the grid
IQ Meter Collar	MC-200-011-V01	1	In the meter main	Conductor to the main panel from the utility meter	—

  - To install CTs for grid-forming systems, refer to the Grid-forming (backup) system on page 65.
  - To install CTs for grid-tied systems, refer to the Grid-tied (non-backup) system on page 61.
- Ensure all EPC-controlled busbars and/or conductors are protected with suitably rated overcurrent devices that are appropriately sized for the busbar or conductor ratings.
- For sites with MPU avoidance with Busbar Overload Control (BBoC) mode enabled, indicate with a label the maximum current setting for back feed that is controlled by EPC.
- For sites with Aggregate export power limiting (PEL) enabled, indicate, with a label, the maximum current setting for back feed from the solar system to the utility service that is controlled by EPC.
- For sites with IQ Battery oversubscription enabled, indicate with a label the nameplate of the IQ Battery units protected by the breaker on the IQ Combiner 6C.
- For grid-forming or grid-tied systems, apply the label on the IQ Combiner 6C dead front at the recommended locations. Record the maximum operating amps value on the label. The label is provided as part of the literature kit.

[9] A maximum of four units of IQ Battery 10C each on IQ Battery breaker 1 and IQ Battery breaker 2 can be installed.

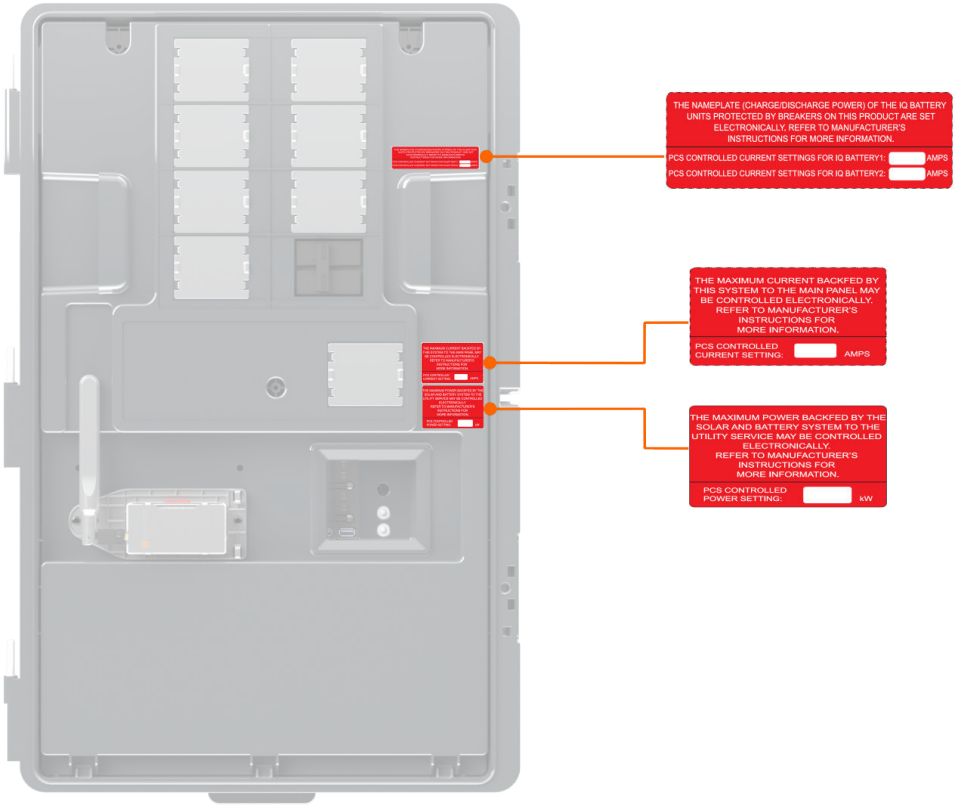

- When using Consumption CTs, labels must be installed as shown.

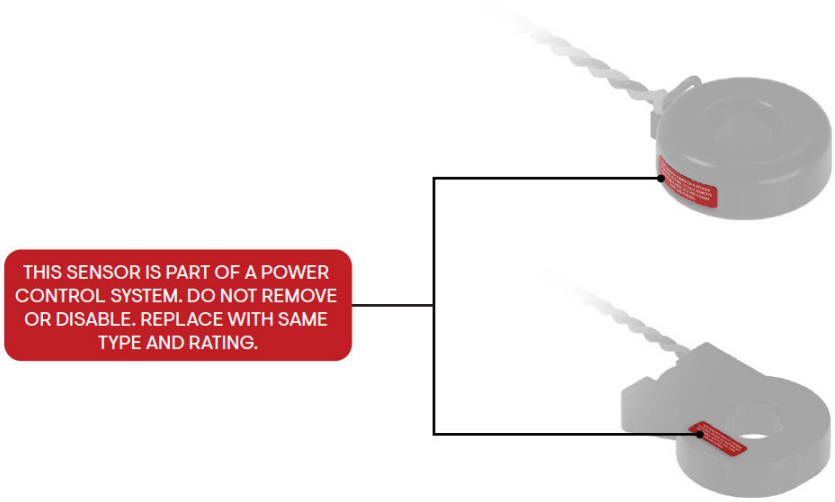

- Use the site configurations section in the Enphase Installer App to define the EPC settings for the site.

15. NEC and utility-compliant disconnect options

The IQ Combiner 6C supports various configurations for connecting disconnects and rapid shutdown initiators for grid-tied and grid-forming systems.

Depending on the location of the IQ Battery 10C, IQ Combiner 6C, and back-fed panel, the Rapid Shutdown initiators and disconnects may vary. The factory-installed PV aggregate breaker functions as a rapid shutdown initiator when the IQ Combiner 6C is installed at a readily accessible outdoor location. In accordance with NEC and local compliance requirements, the system can meet rapid shutdown and disconnect requirements when an external device or disconnect is needed, as per the system configuration installed.

Also, in certain situations, it may be necessary to install a visible blade disconnect (safety disconnect) as a visible break for the DER system at the point of connection to the grid.

A 3-pole or 2-pole visible blade disconnect with the third pole wired to the AC sense header can be used as a visible DER break mechanism. This disconnect can be utilized for various purposes as outlined in specific scenarios.

A 2-pole visible blade disconnect can also be used as a disconnecting means and rapid shutdown initiator. This disconnect can be utilized for various purposes as outlined in specific scenarios.

For wiring the safety disconnects, refer to the Disconnect and rapid shutdown initiator wiring on page 43.

15.1. Compliance matrix: Grid-tied (non-backup) system

The IQ Combiner 6C complies with NEC 2023 initiators and meets utility or AHJ requirements for grid-tied systems across various configurations.

NOTE: System Shutdown Switch is not applicable for grid-tied (non-backup) system.

Initiators/ Disconnect as per NEC or utility requirements	In IQ Combiner 6C		In battery	In the main panel	External disconnects				
	PV aggregate breaker	Battery breakers in IQ Combiner 6 C	Battery switches on IQ Battery 10 C	Backfeed breaker	3-pole, grid-side disconnect	2-pole PV disconnect in line with PV aggregate breaker	2-pole PV disconnect inline with external combiner	3-pole PV disconnect in line with the external combiner	System Shutdown Switch
PV rapid shutdown (2023 NEC 690.12)	Yes	No	No	Yes	Yes	Yes	Yes	Yes	N/A
ESS emergency shutdown (2023 NEC 706.15B)	No	Yes	Yes	Yes	Yes	Yes	No	No	N/A
PV System disconnecting means (2023 NEC 690.13)	Yes	No	No	No	No	Yes	Yes	Yes	N/A
ESS disconnecting means (2023 NEC 706.15)	No	Yes	Yes	No	No	No	No	No	N/A
Visible break for the DER system (only if required by AHJ or utility)	No	No	No	No	Yes	No	No	No	N/A

NOTE: The list applies when the IQ Combiner 6C, IQ Battery, and the main panel are installed in readily accessible outdoor locations. If any of these system components are not installed in readily accessible outdoor locations, the respective initiators within the components shall not be considered as PV rapid shutdown or ESS emergency shutdown requirements.

15.2. Compliance matrix: Grid-forming (backup) system

The IQ Combiner 6C complies with NEC 2023 initiators and meets utility or AHJ requirements for grid-forming systems across various configurations.

Initiators/ Disconnect as per NEC or utility requirements	In IQ Combiner 6C		In battery	In the main panel	External disconnects				
	PV aggregate breaker	Battery breakers in IQ Combiner 6 C	Battery switches on IQ Battery 10 C	Backfeed breaker	3-pole, grid-side disconnect	2-pole PV disconnect in line with PV aggregate breaker	2-pole PV disconnect inline with external combiner	3-pole PV disconnect in line with the external combiner	System Shutdown Switch
PV rapid shutdown (2023 NEC 690.12)	Yes	No	No	No	Yes	Yes	Yes	Yes	Yes
ESS emergency shutdown (2023 NEC 706.15B)	Yes	Yes	Yes	No	Yes	Yes	No	Yes	Yes
PV System disconnecting means (2023 NEC 690.13)	Yes	No	No	No	Yes	Yes	Yes	Yes	Yes[10]
ESS disconnecting means (2023 NEC 706.15)	No	Yes	Yes	No	Yes	No	No	No	Yes[10]
Visible break for the DER system (only if required by AHJ or utility)	No	No	No	No	Yes	No	No	No	No

[10] The System Shutdown Switch (SSD) provides system-level disconnection by opening the IQ Combiner 6C DER relay, disconnecting PV and battery from the grid and connected loads. For maintenance and source-specific isolation, use dedicated DER disconnects or circuit breakers and follow applicable lockout/tagout procedures.

NOTE: The list applies when the IQ Combiner 6C, IQ Battery, and the main panel are installed in readily accessible outdoor locations. If any of these system components are not installed in readily accessible outdoor locations, the respective initiators within the components shall not be considered as PV rapid shutdown or ESS emergency shutdown.

15.3. 3-pole disconnect models

When selecting a 3-pole disconnect for a PV disconnect or grid-side disconnect, ensure the disconnect meets the rating requirements, has the proper environmental rating, and can accept the conductor sizes for both the current-carrying conductors and AC sense conductors. The following table lists some commonly available models of outdoor-rated, 3-pole visible-blade disconnects used as PV-side or grid-side disconnects.

NOTE: This is not a complete list, and other brands and models may be used.

NOTE: The AC sense header is rated for 240 VAC and draws a maximum current of less than 1 A.

Table 1: Non-fusible 3-pole disconnect models

Ratings	Type	Enclosure	Eaton - 3-pole disconnects	Siemens - 3-pole disconnects	ABB/GE - 3-pole disconnects	Schneider Electric- 3-pole disconnects
30	General /Heavy	NEMA 1/NEMA 3R	DG321URB/ DG321UGB/ DH361UGK	GNF321A/ GNF321RA	TGN3321/TGN3321R/ THN3361/THN3361R	DU321/DU321NRB/VHU361
60	General /Heavy	NEMA 1/NEMA 3R	DG322URB/ DG322UGB/ DH362UGK	GNF322A/ GNF322NRA	TGN3322/TGN3322R/ THN3362/THN3362R	DU322/DU322NRB/VHU362
100	General /Heavy	NEMA 1/NEMA 3R	DG323URB/ DG323UGB/ DH363UGK	GNF323/GNF323R	TGN3323/TGN3323R/ THN3363/THN3363R	DU323/DU323NRB/VHU363
200	General /Heavy	NEMA 1/NEMA 3R	DG324URK/ DG324UGK/ DH364UGK	GNF324/GNF324R	TGN3324/TGN3324R/ THN3364/THN3364R	DU324/DU324NRB/VHU364

Table 2: Fusible 3-pole disconnect models

Ratings	Type	Enclosure	Eaton - 3-pole disconnects	Siemens - 3-pole disconnects	ABB/GE - 3-pole disconnects	Schneider Electric- 3-pole disconnects
30	General/ Heavy	NEMA 1/NEMA 3R	DH361NGK/ DH361NRK/DG321NRB	GF321NA/GF321NRA/ HF221N/HF321N/HF321NR	TG4321/TG4321R	D321N/VH321N/ VH321NRB
60	General/ Heavy	NEMA 1/NEMA 3R	DG322NRB/ DH362NGK/ DH362NRK	GF322NA/GF322NRA/ HF322N/HF322 NR	TG4322/TG4322R	D322N/VH322N/ VH322NRB
100	General/ Heavy	NEMA 1/NEMA 3R	DH363NGK/ DH363NRK/ DG323NRB	Not available	TG322/TG322R	D323N/VH323N/ VH323NRB
200	General/ Heavy	NEMA 1/NEMA 3R	DH364NGK/ DH364NRK/ DG324NRK	Not available	Not available	D324N/VH324N/ VH324NRB

NOTE: Ensure that the third pole wire is appropriately sized to fit into the AC sense header.

NOTE: AC sense header accommodates up to 12 AWG maximum; use a wire connector for converting higher gauge wires to lower gauge as needed.

15.4. 2-pole disconnect models

When selecting a 2-pole disconnect for a PV disconnect, ensure the disconnect meets the rating requirements and has the proper environmental rating. The following are some commonly available models of outdoor-rated, 2-pole visible-blade disconnects used as PV-side disconnects.

NOTE: This is not a complete list, and other brands and models may be used.

NOTE: If using a 2-pole disconnect as a grid-side disconnect, ensure the disconnected model uses auxiliary contacts to connect to the AC sense header.

Table 3: Non-fusible 2-pole disconnect models

Ratings	Type	Enclosure	Eaton - 2-pole disconnects	Siemens - 2-pole disconnects	ABB/GE - 2-pole disconnects	Schneider Electric - 2-pole disconnects
30	General/Heavy	NEMA 1/NEMA 3R	DG221URB/DG221UGB/ DH261UGK	GNF221A/GNF221RA	Not available	DU221N/DU221RB
60	General/Heavy	NEMA 1/NEMA 3R	DG222URB/DG222UGB/ DH262UGK	GNF222A/GNF222RA	Not available	DU222N/DU222RB
100	General/Heavy	NEMA 1/NEMA 3R	DG223URB/DG223UGB/ DH263UGK	Not available	Not available	DU223N/DU223RB
200	General/Heavy	NEMA 1/NEMA 3R	DH264UGK/DG224URK	Not available	Not available	DU224N/DU224RB

Table 4: Fusible 2-pole disconnect models

Ratings	Type	Enclosure	Eaton - 2-pole disconnects	Siemens - 2-pole disconnects	ABB/GE - 2-pole disconnects	Schneider Electric- 2-pole disconnects
30	General/Heavy	NEMA 1/NEMA 3R	DH221NRK/DG221NRB/ DG221NGB/DH261NGK	GF221NA/GF221NRA/ HF221N/HF221NR	TG3221/TG321R	D221N/VH221N/ VH221NRB
60	General/Heavy	NEMA 1/NEMA 3R	DG222NRB/ DG222NGB/ DH262NGK/DH222NRK	GF222NA/GF222NRA/ HF222N/HF222 NR	TG3222/TG3222R	D222N/VH222N/ VH222NRB
100	General/Heavy	NEMA 1/NEMA 3R	DG223NRB/ DG223NGB/ DH263NGK/DH223NRK	GF223N	TG3223/TG3223R	D223N/VH223N/ VH223NRB
200	General/Heavy	NEMA 1/NEMA 3R	DG224NRK/ DH264NGK/DH224NRK	GF224N	TG3224/TG3224R	D224N/VH224N/ VH224NRB

16. Closing the enclosure

1. Reinstall the dead front with the Mobile Connect on the enclosure.
2. Turn off the DER breaker(s).
3. Reinstall the IQ Combiner door if removed for installation.

17. Energizing the IQ Combiner 6C

1. Turn on the back feed breaker in the main panel connected to the IQ Combiner 6C.
2. Log in to the Enphase Installer App on your mobile device and ensure the latest version of the IQ Gateway software is available.
3. On the IQ Gateway (inside the combiner), if the AP mode LED is not lit, press the AP mode button.
4. On your mobile device, go to **Settings** and join the Wi-Fi network **IQ Gateway_nnnnnn**(where “nnnnnn” equals the final six digits of the IQ Gateway serial number).
5. For a short period (5-10 minutes), you must keep your mobile device near the IQ Combiner. Follow the on-screen instructions while the update takes place.
6. Once the update is finished and the PV system is installed, the IQ Gateway is ready for site commissioning.

18. Site commissioning

1. Launch the Enphase Installer App and start system activation.

   Launch the Enphase Installer App. Create an activation for a new system, and enter the required information to complete system activation.

2. Add **Devices and Arrays** to the system.

   This step is used to enter the unique serial numbers of all on-site devices. It is recommended that you enter the serial number by scanning the barcode/QR code.

   - Tap **Devices and Array** on the home page.
   - Add the total number of devices to be installed in your system.
   - Scan device serial numbers using a bar code or QR code in the respective device sections. Use your device’s camera to scan serial numbers or enter the serial numbers manually. Manual entry should be used only when you are not able to scan the barcode or QR code of any device.
   - After scanning microinverters, you can use **Array Builder** to assign your scanned microinverters to an array or build an array manually. This step can be completed post-commissioning as well.

3. Setting site configuration and tariff settings.

   Go through the Enphase Installer App flow to set up site configuration and tariff settings.

4. Meter configuration

   This step is used to enable production and consumption meters.

5. Site validation.

   Go through the validation wizard to validate that the system has been correctly commissioned. This section includes the meter configuration wizard that needs to be completed to set up production, consumption, and storage metering on-site.

6. Send a summary report and complete the Home Owner walk-through.

   Open the Home Owner walk-through and discuss all listed points with the homeowner. Generate the system summary report and share it with the homeowner.

19. Safety information

IMPORTANT SAFETY INSTRUCTIONS. SAVE THESE INSTRUCTIONS.

Follow these important instructions during the installation and maintenance of the IQ Combiner 6C.

19.1. Safety and advisory symbols

DANGER: This indicates a hazardous situation, which, if not avoided, will result in death or serious injury.

WARNING: This indicates a situation where failure to follow instructions may be a safety hazard or cause equipment malfunction. Use extreme caution and follow instructions carefully.

NOTE: This indicates information particularly important for optimal system operation. Follow instructions carefully.

19.2. Safety instructions

DANGER: Risk of electric shock. Risk of fire. Do not attempt to repair the IQ Combiner 6C; it contains no user-serviceable parts within the dead front. Tampering with the IQ Combiner 6C will void the warranty. If the IQ Combiner 6C fails, contact Enphase Support for assistance (https://enphase.com/contact/support).

DANGER: Risk of electrocution! Do not install CTs when current flows in the sensed circuit. Always install CT wires in the terminal blocks before energizing the sensed circuit.

DANGER: Risk of electric shock. Do not use Enphase equipment in a manner not specified by the manufacturer. Doing so may cause death or injury to persons or damage to equipment.

DANGER: Risk of electric shock. Be aware that the installation of this equipment includes the risk of electric shock. Do not install the IQ Combiner 6C without first removing AC power from the Enphase system. Ensure the power coming from the microinverters is de-energized before servicing or installing.

DANGER: Risk of electric shock. Risk of fire. Only qualified personnel should troubleshoot, install, or replace the IQ Combiner 6C.

DANGER: Risk of electric shock. Improper servicing of the IQ Combiner 6C or its components may result in a risk of shock, fire, or explosion. To reduce these risks, disconnect all wiring before attempting any maintenance or cleaning.

DANGER: Risk of electric shock. Always de-energize the AC branch circuit before servicing. While connectors are rated for disconnecting under load, it is best practice to de-energize before disconnecting.

DANGER: Risk of electric shock. Risk of fire. Only use electrical system components approved for wet locations.

DANGER: Risk of electric shock. Risk of fire. Ensure that all wiring is correct and that none of the wires is pinched or damaged.

DANGER: Risk of electric shock. Risk of fire. Do not work alone. Someone should be in the range of your voice or close enough to come to your aid when you work with or near electrical equipment. Remove rings, bracelets, necklaces, watches, etc., when working with batteries, photovoltaic modules, or other electrical equipment.

DANGER: Risk of electric shock. Risk of fire. Ensure the circuit breaker(s) are turned off before making any connections. Thoroughly check all the wiring before turning on the power.

WARNING: Risk of electric shock. To maintain the warranty, do not modify the dead front other than to remove filler plates, as needed.

WARNING: Before installing or using the IQ Combiner 6C, read all instructions and cautionary markings in the technical description and on the equipment.

WARNING: Only use the circuit breakers in the IQ Combiner 6C as specified in the instructions. Do not connect load circuits to breakers designated for solar and batteries.

19.3. FCC statement

This equipment has been tested and found to comply with the limits for a Class B digital device, according to part 15 of the FCC Rules. These limits are designed to provide reasonable protection against harmful interference in a residential installation.

This equipment generates, uses, and can radiate radio frequency energy and, if not installed and used in accordance with the instructions, may cause harmful interference to radio communications. However, there is no guarantee that interference will not occur in a particular installation.

If this equipment does cause harmful interference to radio or television reception, which can be determined by turning the equipment off and on, you are encouraged to try to correct the interference by one or more of the following measures:

- Reorient or relocate the receiving antenna.
- Increase the separation between the equipment and the receiver.
- Connect the equipment to an outlet on a circuit different from that to which the receiver is connected.
- Consult the dealer or an experienced radio/TV technician for help.

Changes or modifications not expressly approved by the party responsible for compliance may void the user's authority to operate the equipment.

This Class B digital apparatus complies with Industry Canada ICES-003.

WARNING: The IQ Combiner 6C has a pre-installed heat shield attached to the enclosure door. Do not remove the heat shield.

WARNING: This product is intended for operation in an environment having a maximum ambient temperature of 115°F (46°C).

WARNING: Bonding between conduit connections is not automatic and must be provided as part of the installation.

NOTE: Carry out all wiring in compliance with applicable local electrical codes, the Canadian Electrical Code, Part I, or the National Electrical Code (NEC), ANSI/NFPA 70

NOTE: Protection against lightning and resulting voltage surges must be in accordance with local standards.

NOTE: Using unapproved attachments or accessories could result in damage or injury.

NOTE: Install the IQ Combiner 6C in the field with 194°F (90°C) or higher copper conductors sized per local code requirements and voltage drop/rise considerations.

NOTE: Use Class 1 wiring methods for field wiring connections to terminals of a Class 2 circuit. Select the wire gauge used based on the protection provided by the circuit breaker(s)/fuses. Overcurrent protection must be installed as part of the system installation.

NOTE: To ensure optimal reliability and to meet warranty requirements, the IQ Combiner 6C must be installed according to the instructions in this guide.

Appendix A : Legends

A1: DER relay
A2: Backfeed lugs
B1: Load control relay
LCB: Upto 1 x 80 A for load controller breaker
PVA: Preinstalled 60 A PV Aggregate (PVA) breaker as rapid shutdown device (RSD)
PV1, PV2, PV3, PV4: upto 5 x 20 A for PV breakers
IQB1, IQB2: upto 2 x 80 A for IQ Battery (IQB) breaker
IQ EVSE: upto 1 x 60 A for 1 x IQ EV Charger breaker
PF: PLC ferrite (PF) at PV aggregate (L2)
USB1: Mobile connect connection
USB2: Factory wired connection to gateway

CT1: Integrated revenue grade PV CT (L2)
CT2, CT3: Integrated revenue grade battery CTs (L1, L2)
CT4,CT5: Integrated backfeed CTs (L1,L2)
CT6, CT7: Integrated load control CTs (L1, L2)
CT8: Install EVSE CT as needed, wire EVSE CT (L2) to gateway
CT9, CT10: Install Consumption CTs (L1, L2) as needed , wire to load/Consumption CT connector

Connectors	
1	IQ Battery control header-1
2	IQ Battery control header-2
3	IQ Meter Collar control header-3
4	Spare control header-4 (not to be used)
5	RS485
6	Ride Through (RT) Power supply accessory
7	Rope CT-power supply
8	Load/Consumption CT connector
9	Load relay connector
10	NO dry contact relay
11	EVSE CT
12	NO/NC dry contact relay
13	AC sense


Branch circuit breaker


All unmarked connections are intended for factory use only


Latching relay


Ethernet connection


Insulated in-line splice connector. (for connecting PV disconnect on the PV aggregate breaker feed-in)

Field wired ground conductor
Field wired Neutral conductor
Field wired ungrounded conductor
Single line representation of field wired conductors
Control wiring between system components

Appendix B : Installation of production meter/external DER meter

A production meter/external DER meter may be installed at any of the marked locations shown in the diagram, or at a combination of these locations, as needed:

1. On the aggregate connection to the PVA breaker.
2. On the backfeed lugs.

NOTE: If a production/DER meter is installed on the backfeed lugs, do not connect loads to the combiner (for example, EVSEs or controlled loads).

3. On the connection from the load controller breaker (LCB) to third-party PV (only if used).

   An external production meter can be installed between the external combiner and the IQ Combiner 6C, with the option to include a disconnect in the circuit. A grid-side disconnect connection linked to the AC sense header can also be used as a suitable installation point for the DER meter.

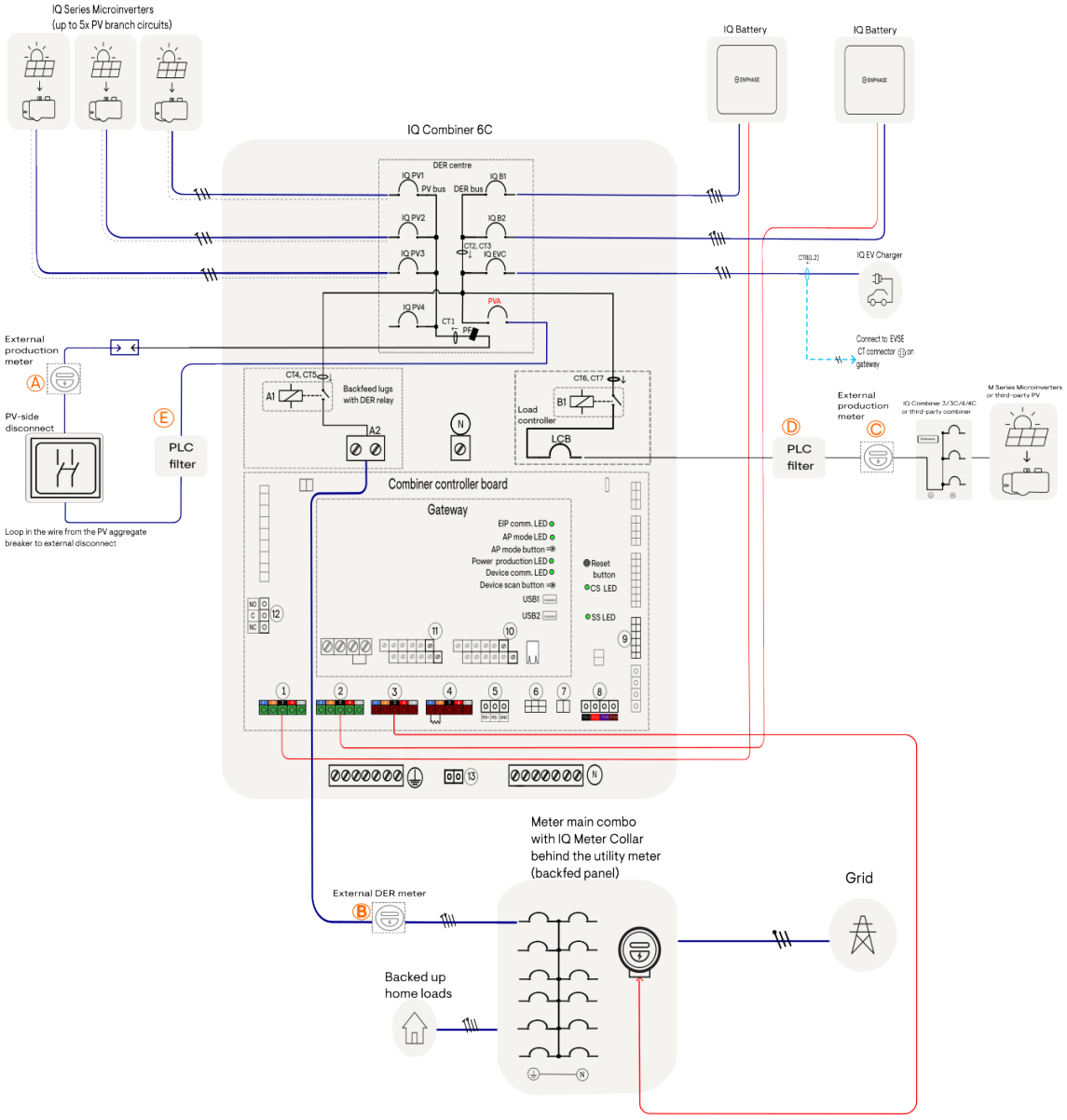

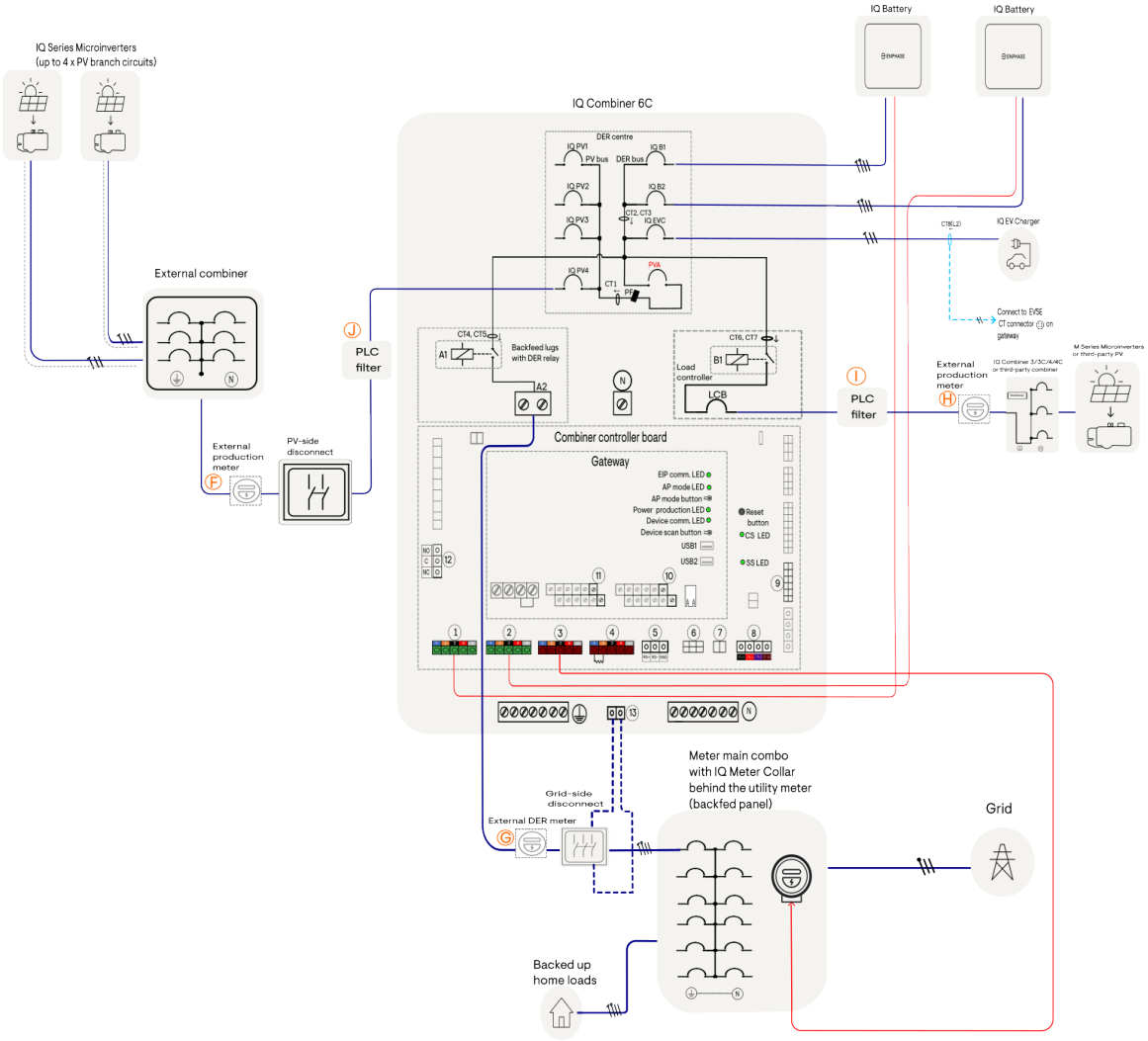

Appendix C : Multiple Gateway installation guidelines for PLC interference mitigation

Installation of PLC filters

- Required at any site with two or more gateways, whether they are integrated into a combiner or deployed as standalone units connected to an IQ Combiner 6C.
- Select a filter with a current rating equal to or greater than the maximum current on the PV branch circuit.
- Install at any one of the filter locations marked on the system wiring diagram in Appendix B.
- Do not route filter input and output wiring together in the same bundle, conduit, or knockout.

Filter SKU	Rated current
IQ-LCF-040-1P	Up to 40 A
Q-LCF-064-1P	Up to 64 A
IQ-LCFE-200-1P	Up to 200 A

NOTE: Do not install a PLC filter between a gateway and its own microinverters.

Conduit and cable routing

- Each PLC domain must be routed through its own conduit. Minimize the length of any parallel routing between domains.
- Ensure that the metallic conduit run is continuous end-to-end and bonded at both ends.

Cable routing	Minimum separation
Bonded metallic conduit, continuous and bonded at both ends (EMT or RMC with EGC per NEC)	6 in (150 mm)[11]
Non-metallic or ungrounded raceway (PVC, NM-B)	3.3 ft (1 m)
Exposed cable (roof IQ Cable under array, rooftop J-boxes)	3.3 ft (1 m)

[11] Bonded metallic conduit now requires 6 in (150 mm) minimum separation, and must be continuous and bonded at both ends to qualify. The 6 in. minimum provides margin where conduit bonding continuity is not verified at install. Here, conduit bonding continuity means that the metallic conduit provides an uninterrupted electrical path along its entire length, with all sections and fittings maintaining electrical connectivity and being properly bonded at both ends.

NOTE: The guidance provided in this section represents recommended best practices for PLC cable routing and separation. These recommendations are based on field-proven installation methods and engineering analysis to help ensure reliable PLC communication. Communication performance may vary depending on the specific site configuration and installation environment.

NOTE: PLC interference increases in direct proportion to the length of the parallel run. Longer shared routing distances increase the potential for PLC interference between the domains, even when separation remains unchanged.

NOTE: A conduit bonded at only one end does not qualify for reduced separation. Compression fittings or threaded RMC provide the best results.

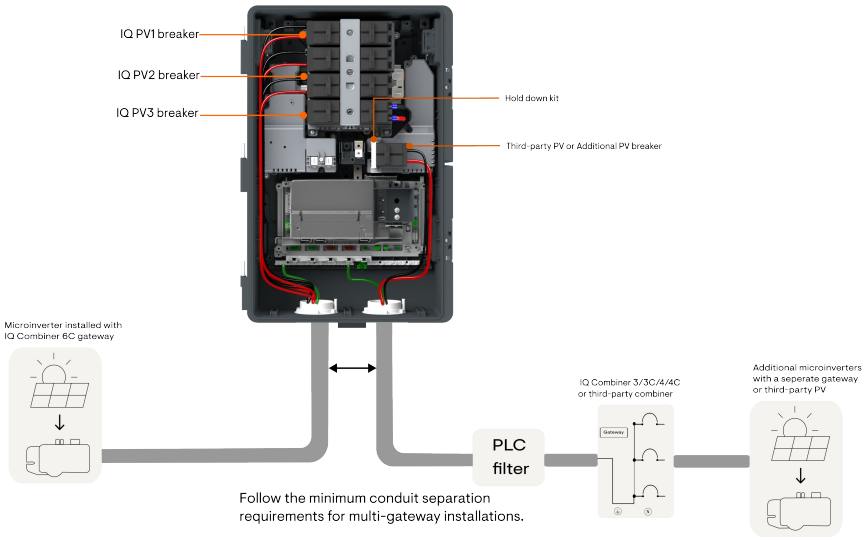

PLC filter needs to be installed in following configuration:

1. Configuration 4 - Grid-tied - Solar Plus Battery + legacy microinverters/third-party PV (without IQ Meter Collar)
2. Configuration 6 - Grid-forming - Whole Home backup + legacy microinverters/third-party PV (with IQ Meter Collar behind the utility meter)
3. Configuration 9 - Grid-forming - Partial Home backup + legacy microinverters/third-party PV (IQ Meter Collar in a discrete meter pan)
4. Configuration 10 - Grid-forming - Whole Home backup with Enphase legacy combiner (with IQ Meter Collar behind the utility meter)
5. Configuration 11a - Grid-forming - Whole Home backup for a 400 A site using more than one IQ Combiner 6C
6. Configuration 11b - Grid-forming - Partial Home backup for a 400 A site using one IQ Combiner 6C

Appendix D : Recommended distance between disconnect and IQ Combiner 6C

WARNING: Excessive voltage drop between the IQ Combiner 6C and the PV-side disconnect can cause unintended Rapid Shutdown (RSD) activation. Wiring must comply with the limits in this section to avoid nuisance shutdowns.

When connecting a PV-side disconnect to the PV aggregate (PVA) breaker, the voltage drop at the PVA terminals must not exceed 5 V at the maximum operating current. Voltage drop above 5 V may trigger unintended RSD activation.

Select a conductor size and run length from the table below that keeps voltage drop within the 4 V limit. Run length is the one-way distance between the IQ Combiner 6C and the PV-side disconnect, measured along the conductor path in line with the PVA breaker.

Conductor size (Cu cable with 194°F (90°C) insulation)	Max current (A)	Max. run length to PV disconnect, inline with PVA breaker (ft)	Max. run length to PV disconnect, inline with external combiner, 3-pole (ft)
1/0 AWG Cu	97.58	47.4	94.9
1 AWG Cu	83.23	44.1	88.3
2 AWG Cu	64	45.5	91.0
	74.62	39.0	78.1
3 AWG Cu	48	48.1	96.3
	66.01	35.0	70.0
4 AWG Cu	48	38.2	76.3
	54.53	33.6	67.2

Listed lengths are based on copper conductors with 194°F (90°C) insulation, 114.8°F (46°C) ambient temperature, and 7–9 current-carrying conductors per conduit.

If installation conditions differ, the listed lengths are invalid and must be recalculated.

This table is a guideline and does not cover every configuration. For any conductor size, operating current, or condition not shown, calculate the voltage drop at the PVA terminals and confirm it is below 5 V before energizing the system.

Appendix E : System configurations

Based on the user's requirement, the IQ Combiner can be installed in multiple configurations.

Configuration	System type	Description
1.	Grid-tied	Solar Only (without IQ Meter Collar)
2.	Grid-tied	Battery Only (without IQ Meter Collar)
3.	Grid-tied	Solar Plus Battery (without IQ Meter Collar)
4.	Grid-tied	Solar Plus Battery + legacy microinverters/third-party PV (without IQ Meter Collar)
5.	Grid-forming	Whole Home backup (with IQ Meter Collar behind the utility meter)
6.	Grid-forming	Whole Home backup + legacy microinverters/third-party PV (with IQ Meter Collar behind the utility meter)
7.	Grid-forming	Whole Home backup (IQ Meter Collar in a discrete meter pan)
7a.	Grid-forming	Whole Home backup with supply-side connection
8.	Grid-forming	Partial Home backup (IQ Meter Collar in a discrete meter pan)
9.	Grid-forming	Partial Home backup + legacy microinverters/third-party PV (IQ Meter Collar in a discrete meter pan)
10.	Grid-forming	Whole Home backup with Enphase legacy combiner (with IQ Meter Collar behind the utility meter)
11a.	Grid-forming	Whole Home backup for a 400 A site using more than one IQ Combiner 6C
11b.	Grid-forming	Partial Home backup for a 400 A site using one IQ Combiner 6C

Grid-tied (non-backup) system

A grid-tied microgrid system is always connected to the utility grid. When the energy produced exceeds the energy consumed, the excess energy can be fed back into the grid. However, a grid-tied system alone does not provide a backup solution when the utility grid is unavailable.

Table 5: Supported system components for grid-tied system configurations

	Configuration 1	Configuration 2	Configuration 3	Configuration 4
IQ8+ IQ7/IQ6 Microinverters	Yes[12]	No	Yes[12]	Yes[12]
IQ Combiner 6C	Yes	Yes	Yes	Yes
Consumption CTs	Yes	Yes	Yes	Yes
Ride Through Power supply board[13]	Yes	No	No	No
IQ EV Charger	Yes	Yes	Yes	Yes
IQ Battery 10C/10CS	No	Yes	Yes	Yes
M Series Microinverters/third-party PV[14]	No	No	No	Yes
IQ Meter Collar[15]	No	No	No	No

For information on installing the production/DER meter, see Installation of production meter/external DER meter on page 57.

24.1.1 Configuration 1 - Grid-tied - Solar Only (without IQ Meter Collar)

This is the preferred configuration when homeowners want to minimize their utility bills and reduce their carbon footprint without requiring backup. Due to the Enphase system's modular design, homeowners have the option to start with this configuration and upgrade to storage later.

This configuration requires the installation of external Consumption CTs for home energy monitoring.

[12] This configuration supports mixing of IQ8 Microinverters with IQ6/IQ7.
[13] This item is available as an optional accessory.
[14] The system may need a software upgrade during commissioning to support third-party/legacy PV.
[15] Available as an optional accessory, requires external Consumption CTs if not installed.

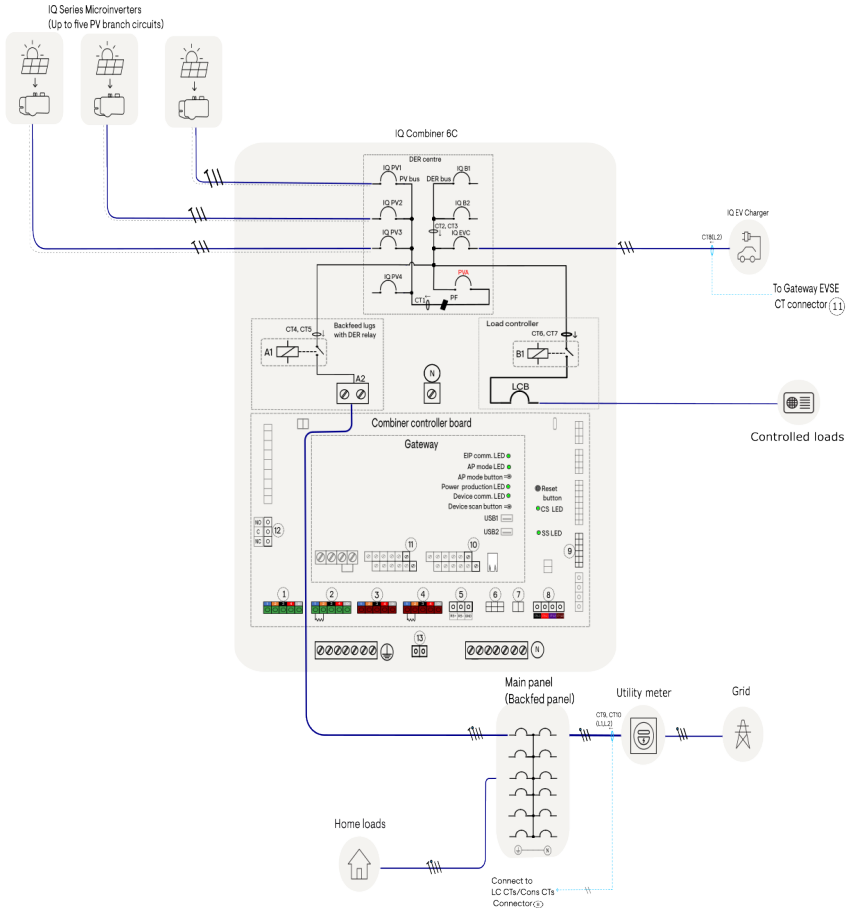

Figure 2: Grid-tied, Solar Only (without IQ Meter Collar)

NOTE: The ride-through power supply board with capacitors (SKU: X-IQ-NA-PSBECAP-R6) is an optional accessory that helps manage the interaction between the solar system and the grid, ensuring compliance with local regulations and standards. It is not mandatory and can be ordered separately if needed.

NOTE: Disassemble the integrated load controller to make space for the assembly of the power supply board. For more information, see Ride-through power-supply board on page 19.

NOTE: For notations, refer to Legends on page 57.

For solar-only systems without batteries, a separate accessory may be required for grid-tied operation only if explicitly directed by Enphase Support or the relevant regulatory authorities. The system remains compliant with IEEE 2030.5 even without the capacitor-based power-supply board.

NOTE: If the ride-through power supply board accessory is installed, the integrated load controller must be disassembled to facilitate the assembly of the accessory. Refer to the Ride-through power-supply board on page 19 for more details.

NOTE: If the ride-through power supply board is not assembled, an integrated load controller with built-in CTs can be used to connect loads removed from the back-fed panel or main panel, or any additional loads.

24.1.2 Configuration 2 - Grid-tied - Battery Only (without IQ Meter Collar)

This configuration is ideal for homeowners looking to reduce their utility bills and store energy for use during peak hours without providing backup.

This configuration requires the installation of external Consumption CTs for home energy monitoring.

The IQ Combiner 6C includes an integrated load controller with built-in CTs, which can be used to connect loads removed from the back-fed panel or main panel.

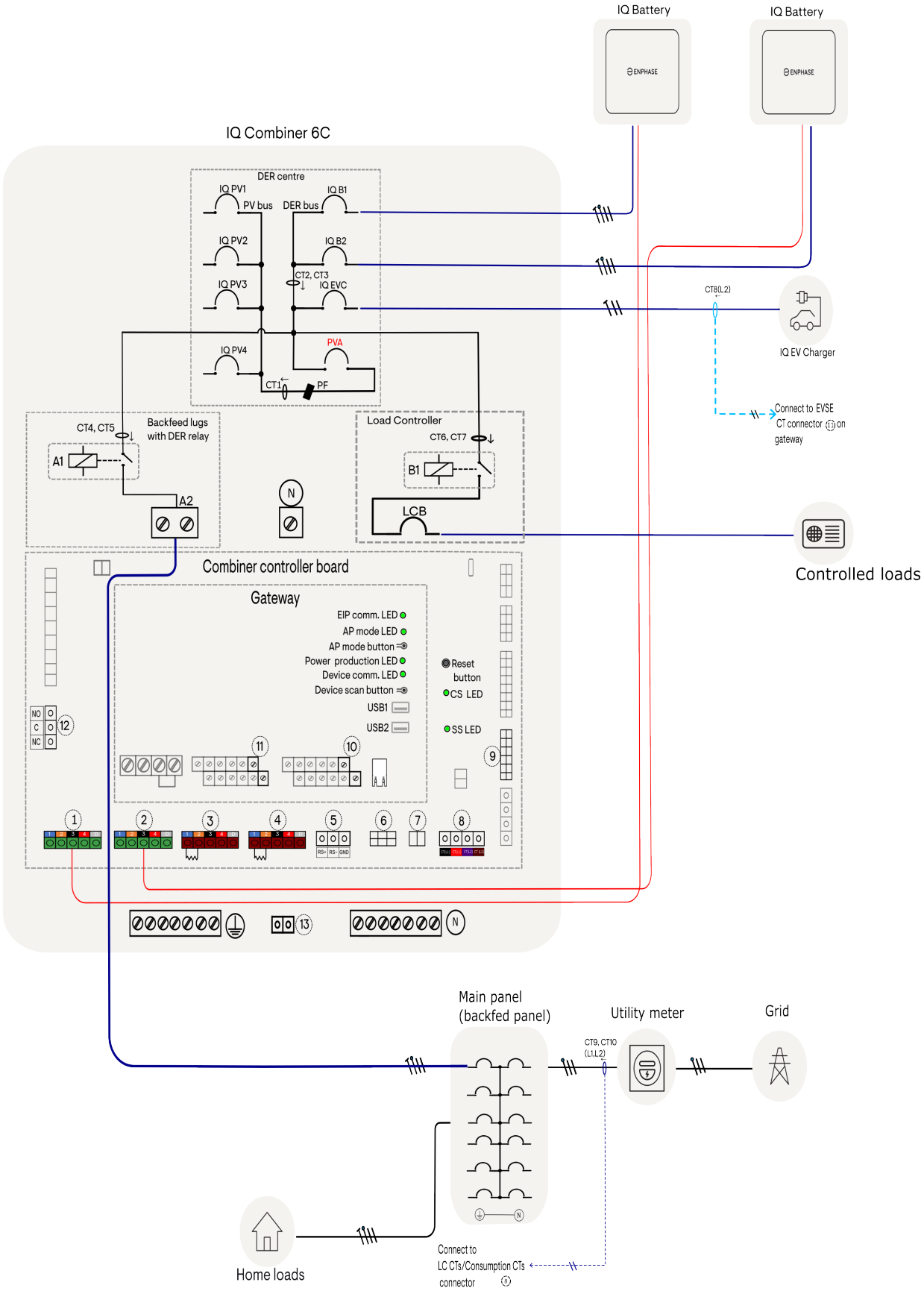

Figure 3: Grid-tied, Battery Only (without IQ Meter Collar)

24.1.3 Configuration 3 - Grid-tied - Solar Plus Battery (without IQ Meter Collar)

This configuration enhances the benefits for homeowners by combining the advantages of configurations 1 and 2. The system allows energy generated by the solar panels to be stored and used during the day or at night.

This configuration requires the installation of Consumption CTs for home energy monitoring in the absence of an IQ Meter Collar.

The IQ Combiner 6C includes an integrated load controller with built-in CTs, which can be used to connect loads removed from the back-fed panel, main panel, or any additional loads.

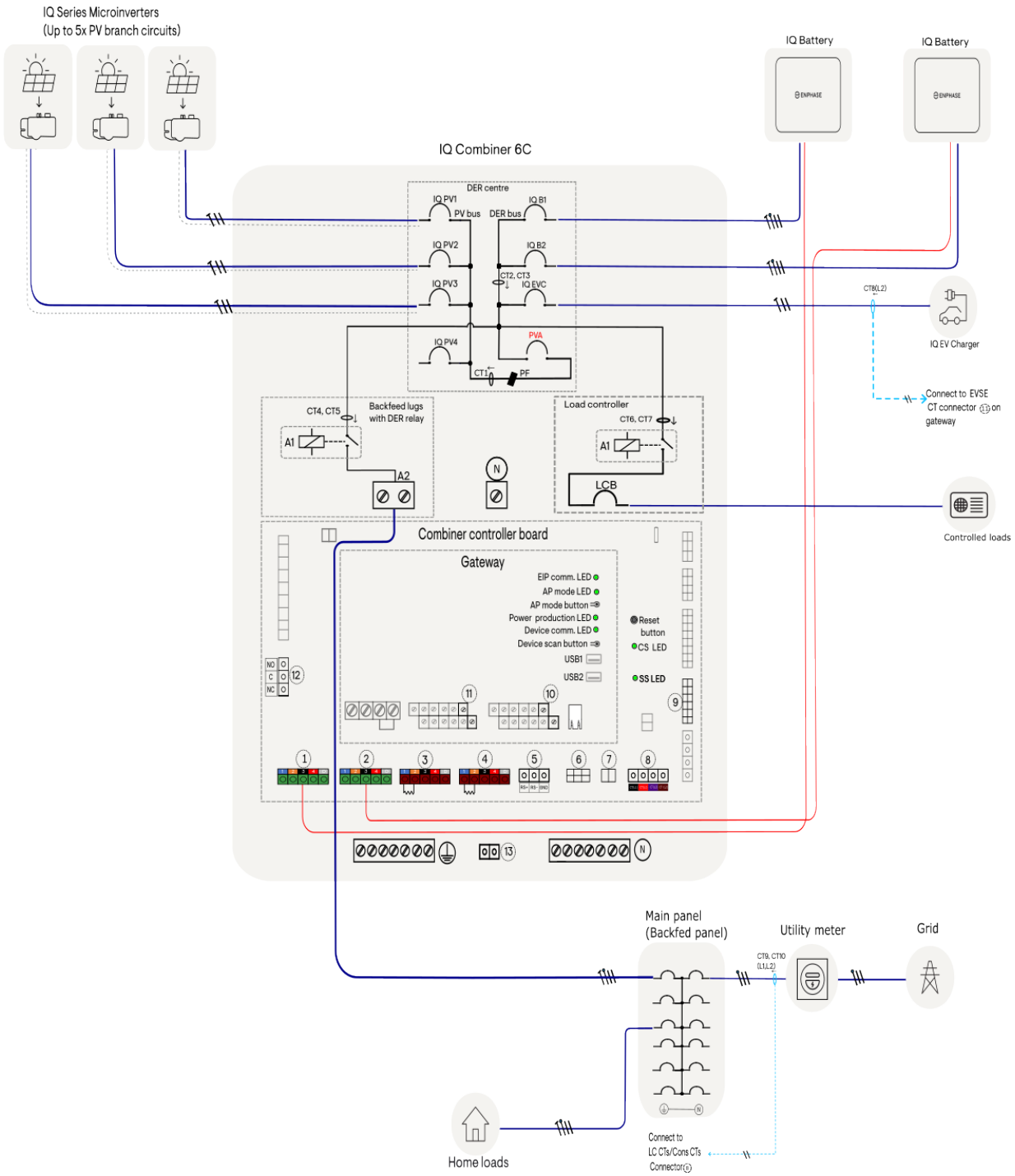

Figure 4: Grid-tied, Solar Plus Battery (without IQ Meter Collar)

24.1.4 Configuration 4 - Grid-tied - Solar Plus Battery + legacy microinverters/third-party PV (without IQ Meter Collar)

This configuration further enhances the benefits for homeowners compared to configuration 3 by providing the option to add legacy microinverters or third-party PV systems for NEM 1.0/NEM 2.0 systems.

The IQ Combiner 6C includes an integrated load controller that serves multiple purposes. In this scenario, the integrated load controller is used for adding legacy PV or third-party PV systems.

The configuration requires the installation of external Consumption CTs for home energy monitoring.

An additional pair of external CTs is required to monitor legacy/third-party systems.

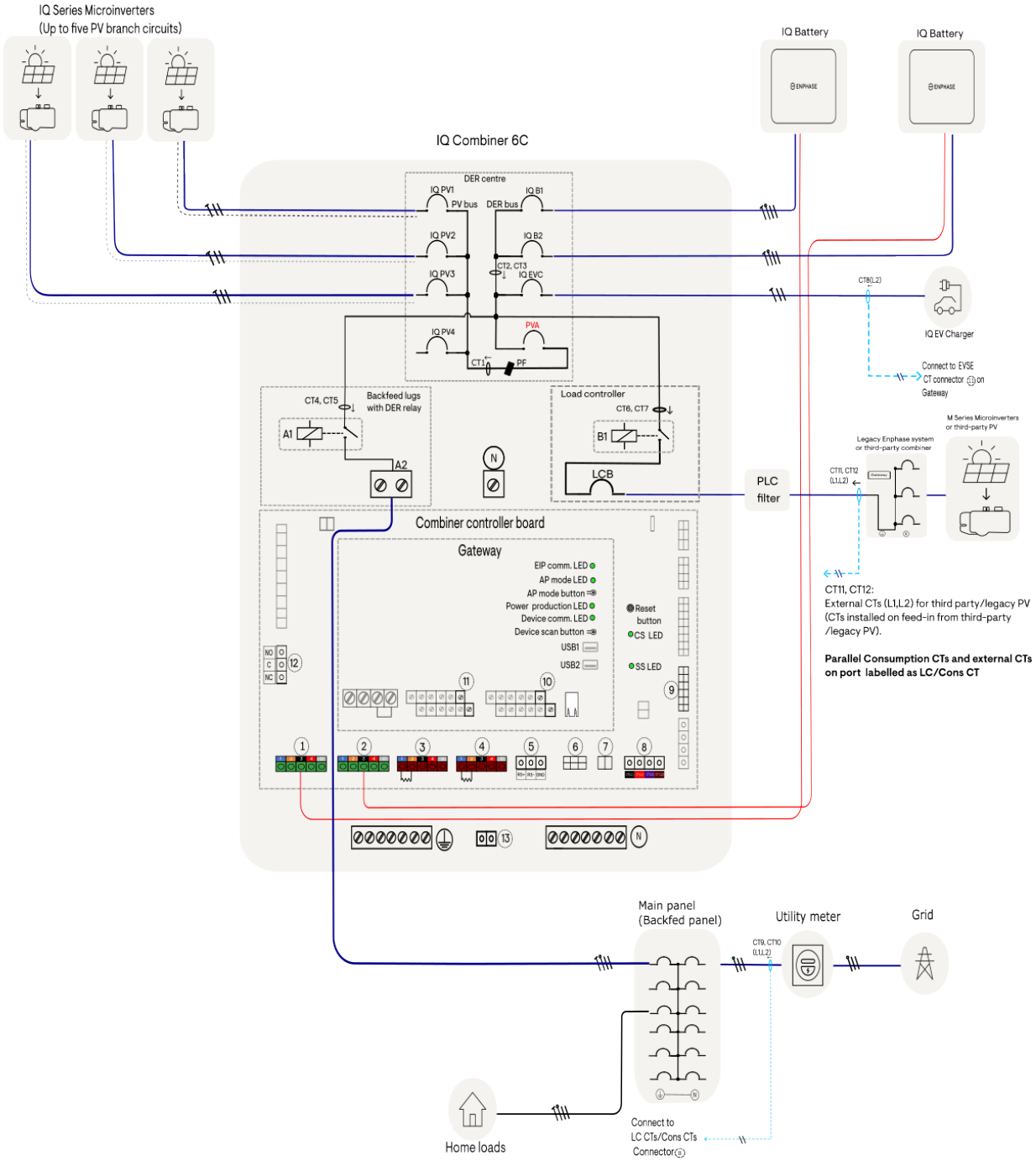

Figure 5: Grid-tied, Solar Plus Battery + legacy microinverters/third-party PV (without IQ Meter Collar)

For more information, see Consumption CTs wiring on page 28.

NOTE: The integrated gateway within IQ Combiner 6C does not support legacy Enphase PV or a third-party PV. Legacy Enphase PV systems (M Series, IQ6/IQ7 or IQ8 Series) connected to the integrated load controller require a PLC filter to prevent communication interference between the two gateways.

Refer to Appendix C for details on PLC filter

NOTE: The system may need a software upgrade during commissioning to support this configuration.

Grid-forming (backup) system

A grid-forming system is further enhanced compared to a grid-tied system. Unlike grid-tied systems, which rely on external grid support for stability, grid-forming systems can operate independently and establish a microgrid when needed. They can support loads even when the utility grid is unavailable.

Table 6: Supported system components for grid-forming system configurations

System component	Configuration 5	Configuration 6	Configuration 7/7a	Configuration 8	Configuration 9	Configuration 10
IQ8/IQ7/IQ6 Microinverters[16]	Yes	Yes	Yes	Yes	Yes	Yes

[16] Grid-forming system does not support mixing of IQ8 Microinverters with IQ6/IQ7 Microinverters.

System component	Configuration 5	Configuration 6	Configuration 7/7a	Configuration 8	Configuration 9	Configuration 10
IQ Combiner 6C	Yes	Yes	Yes	Yes	Yes	Yes
Consumption CTs [17]	No	No	No	Yes	Yes	No
IQ EV Charger	Yes	Yes	Yes	Yes	Yes	Yes
IQ Battery 10C/10CS	Yes	Yes	Yes	Yes	Yes	Yes
Legacy microinverters/third-party PV[18]	No	Yes	No	No	Yes	No
IQ Meter Collar	Yes	Yes	Yes	Yes	Yes	Yes

NOTE: Grid-forming systems do not support mixing of IQ8 Microinverters with IQ6/IQ7.

For information on installing the production/DER meter, see Installation of production meter/external DER meter on page 57.

24.2.1 Configuration 5 - Grid-forming - Whole Home backup (with IQ Meter Collar behind the utility meter)

This configuration is ideal for homeowners who want to ensure that all home loads stay powered during a utility grid outage.

The configuration necessarily requires the installation of an IQ Meter Collar. The IQ Meter Collar needs to be installed behind the utility meter, either on a meter-main combo or a separate utility meter.

NOTE: The IQ Meter Collar works as a microgrid interconnect device (MID) to enable backup. The installation of the IQ Meter Collar enables full home monitoring.

NOTE: The configuration requires utility authorization for the installation of the IQ Meter Collar behind the utility meter.

The IQ Combiner 6C includes an integrated load controller with built-in CTs, which can be used to connect additional loads removed from the back-fed panel or main panel.

[17] Optional for full home monitoring.
[18] The system may need a software upgrade during commissioning to support third-party/legacy PV.

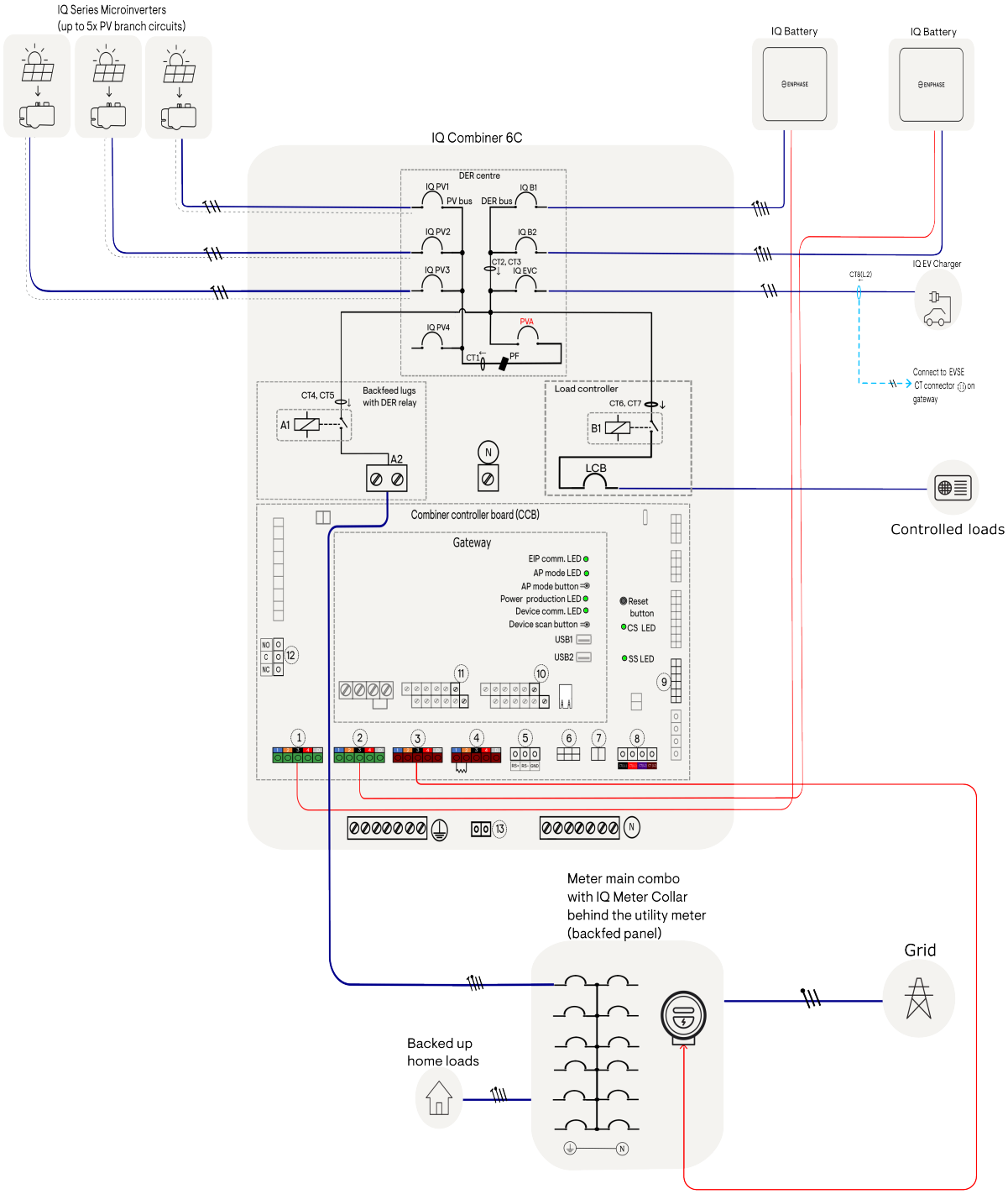

Figure 6: Grid-forming, Whole Home backup (with IQ Meter Collar behind the utility meter)

24.2.2 Configuration 6 - Grid-forming - Whole Home backup + legacy microinverters/third-party PV (with IQ Meter Collar behind the utility meter)

This configuration enhances Whole Home backup by supporting legacy microinverters or third-party PV systems for NEM 1.0/2.0 expansion on integrated load controller space.

The configuration necessarily requires the installation of an IQ Meter Collar. The IQ Meter Collar needs to be installed behind the utility meter, either on a meter-main combo or a separate utility meter.

NOTE: The IQ Meter Collar works as a microgrid interconnect device (MID) to enable backup. The installation of the IQ Meter Collar also enables full home monitoring.

NOTE: The configuration requires utility authorization for the installation of the IQ Meter Collar behind the utility meter.

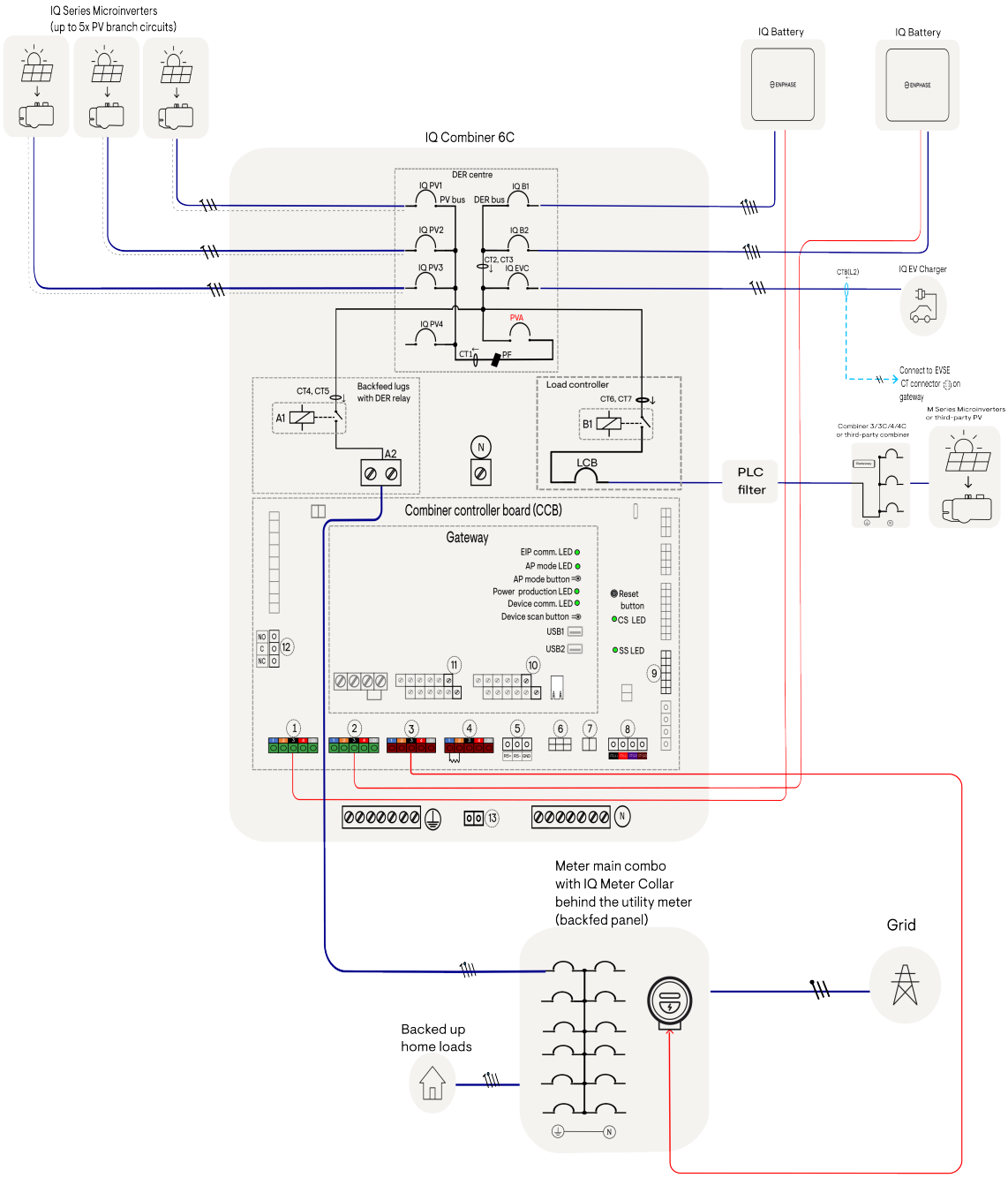

Figure 7: Whole Home backup + legacy microinverters/third-party PV (with IQ Meter Collar behind the utility meter)

NOTE: The IQ Combiner 6C includes an integrated load controller with built-in CTs that serve multiple purposes. In this scenario, the integrated load controller is used for adding legacy PV or third-party PV systems. Integrated CTs are used for monitoring legacy PV or third-party PV systems.

NOTE: Legacy Enphase PV systems (M Series, IQ6/IQ7/IQ8 Series) connected to the integrated load controller require a PLC filter to prevent communication interference between the two gateways. Refer to Appendix C for details on PLC filter.

NOTE: The integrated gateway within IQ Combiner 6C does not support legacy Enphase PV or a third-party PV.

24.2.3 Configuration 7 - Grid-forming - Whole Home backup (IQ Meter Collar in a discrete meter pan)

This is the preferred configuration when homeowners want the home to remain powered when the utility grid shuts down. This configuration allows homeowners to have a Whole Home backup when the utility does not authorize the IQ Meter Collar installation behind the utility meter.

The configuration necessarily requires the installation of an IQ Meter Collar. The IQ Meter Collar can be installed on a discrete Form 2S meter pan between the utility meter and the back-fed panel.

NOTE: The IQ Meter Collar works as a microgrid interconnect device (MID) to enable backup. The installation of the IQ Meter Collar also enables full home monitoring.

NOTE: The configuration does not require utility authorization for the installation of the IQ Meter Collar on a discrete Form 2S meter pan.

The IQ Combiner 6C includes an integrated load controller with built-in CTs, which can be used to connect additional loads removed from the back-fed panel or main panel.

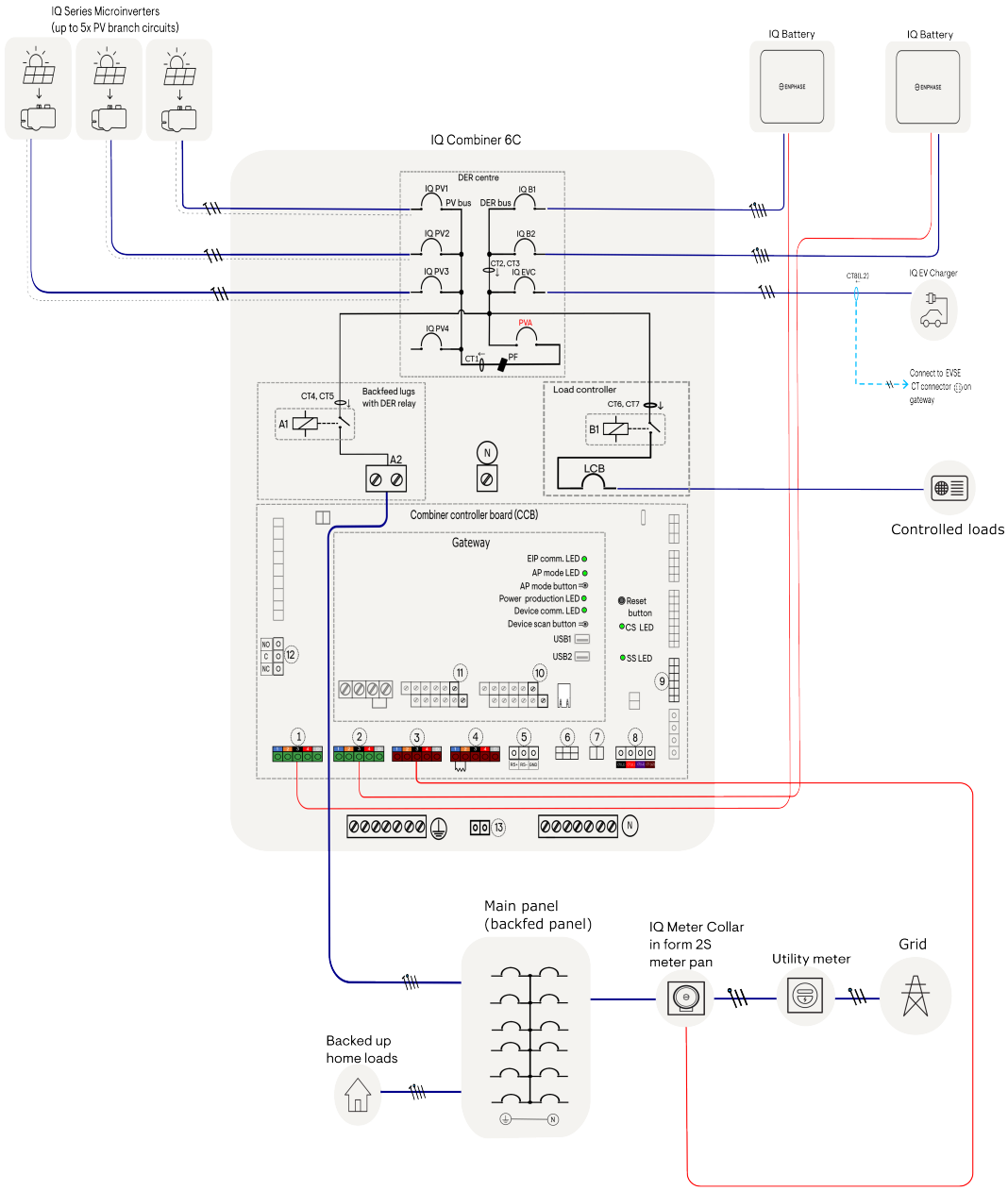

Figure 8: Grid-forming, Whole Home backup (IQ Meter Collar in a discrete meter pan)

24.2.4 Configuration 7a - Grid-forming - Whole Home backup with supply-side connection

A supply-side tap connection is used when the main service panel cannot support load-side backfeeding, or when PV and/or ESS equipment must be added without modifying existing service equipment.

Under NEC 2023 Section 230.82(6), PV systems and energy storage systems (ESS) are permitted to connect ahead of the service disconnecting means. Such connections must use equipment listed for supply-side connections in accordance with NEC 2023 Section 230.46, with tap-conductor protection provided in accordance with NEC 2023 Section 240.21.

NOTE: A disconnect in the supply-side tap path may be fusible or non-fusible. However, an OCPD is required if the tap conductors do not meet the protection requirements of NEC 240.21.

NOTE: Confirm with the local authority having jurisdiction (AHJ) whether loads may be connected to the IQ EV Charger breaker and the integrated load controller space.

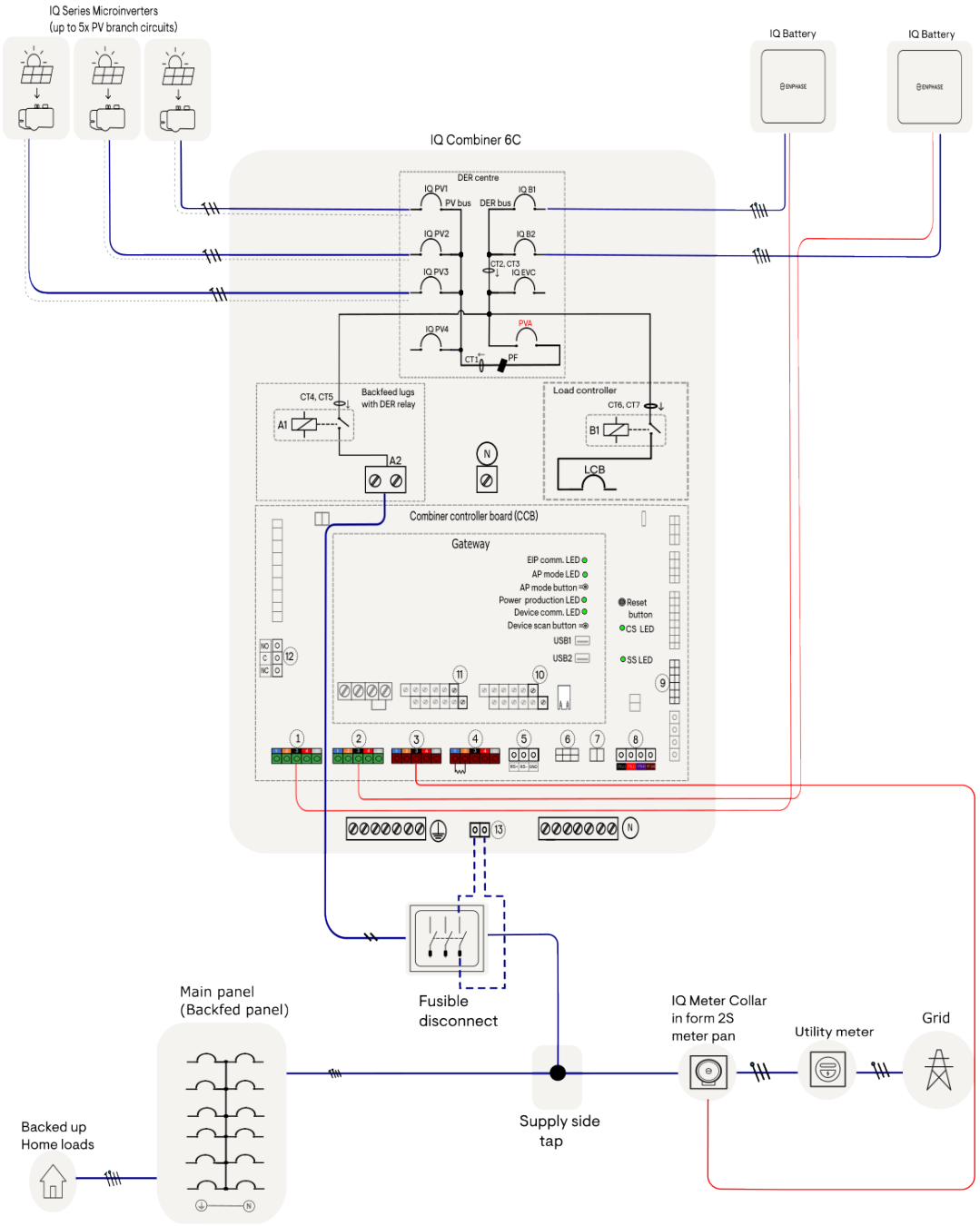

Figure 9: Configuration 7a, Whole Home backup with supply-side connection

24.2.5 Configuration 8 - Grid-forming - Partial Home backup (IQ Meter Collar in a discrete meter pan)

This configuration is ideal for homeowners who want to make sure that only specific home loads remain powered during a utility grid outage.

The configuration necessarily requires the installation of an IQ Meter Collar. The IQ Meter Collar can be installed on a discrete Form 2S meter pan between the IQ Combiner 6C and a back-fed panel.

NOTE: The IQ Meter Collar works as a microgrid interconnect device (MID) to enable backup. This configuration may require the installation of external Consumption CTs for Whole Home monitoring.

NOTE: The configuration does not require utility authorization for the installation of the IQ Meter Collar on a discrete Form 2S meter pan.

The configuration requires the installation of external Consumption CTs for home energy monitoring.

The IQ Combiner 6C includes an integrated load controller with built-in CTs, which can be used to connect additional loads removed from the back-fed panel or main panel.

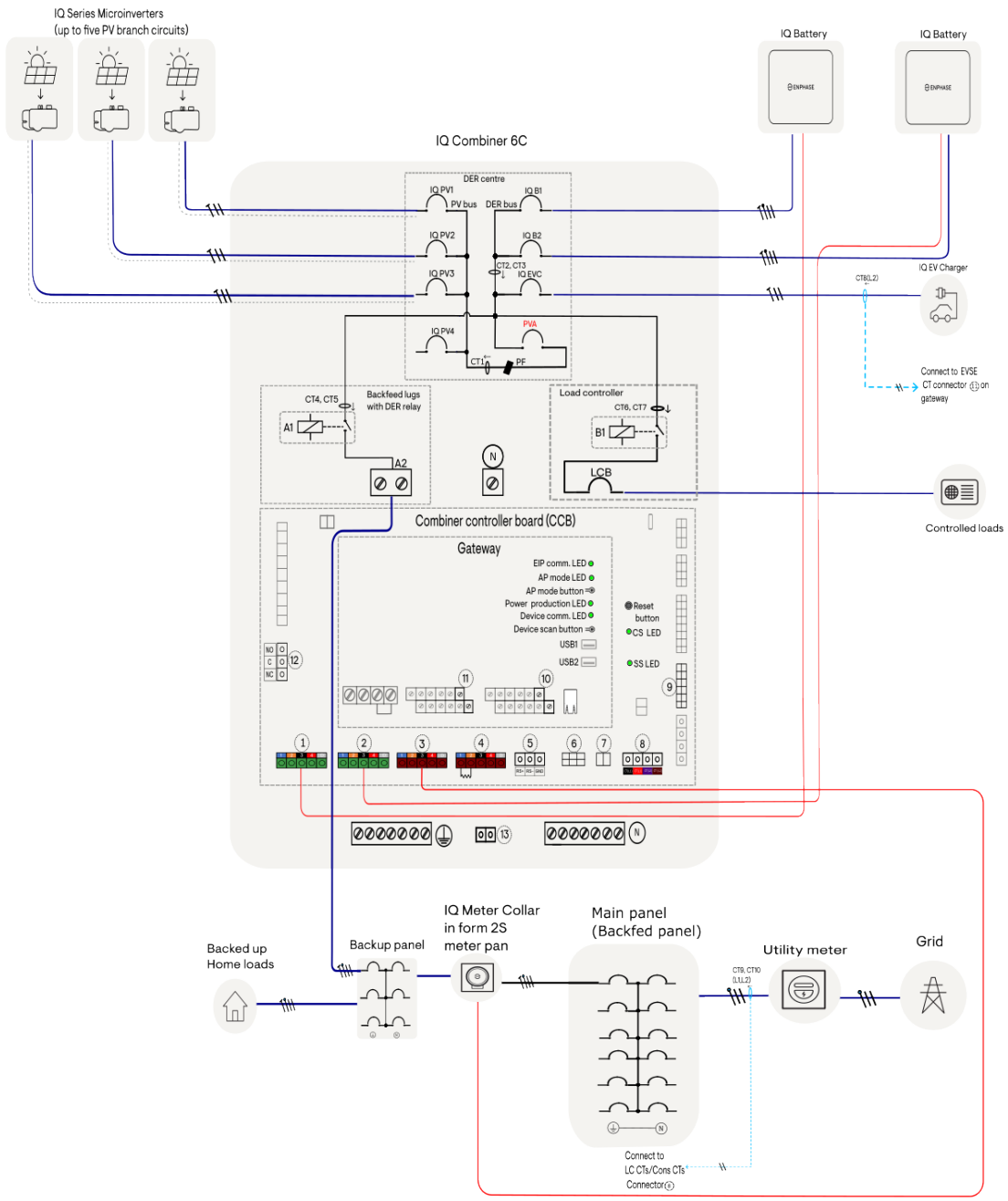

Figure 10: Grid-forming, Partial Home backup (IQ Meter Collar in a discrete meter pan)

The IQ Combiner 6C unit includes an integrated load controller that utilizes the load controller CT connector. In this configuration to add Consumption CTs, remove the connection to Load Control CT from the connector 8. For more information, see Consumption CTs wiring on page 28.

24.2.6 Configuration 9 - Grid-forming - Partial Home backup + legacy microinverters/third-party PV (IQ Meter Collar in a discrete meter pan)

This configuration provides an additional option for Partial Home backup, supporting legacy microinverters or third-party PV systems for NEM 1.0/2.0 expansion on integrated load controller space.

The configuration necessarily requires the installation of an IQ Meter Collar. The IQ Meter Collar can be installed on a discrete Form 2S meter pan between the IQ Combiner 6C and a back-fed panel.

NOTE: The IQ Meter Collar works as a microgrid interconnect device (MID) to enable backup. This configuration necessarily requires the installation of external Consumption CTs for Whole Home monitoring.

NOTE: The configuration does not require utility authorization for the installation of the IQ Meter Collar on a discrete Form 2S meter pan.

The configuration requires the installation of external Consumption CTs for home energy monitoring.

An additional pair of external CTs is required to monitor legacy/third-party PV systems.

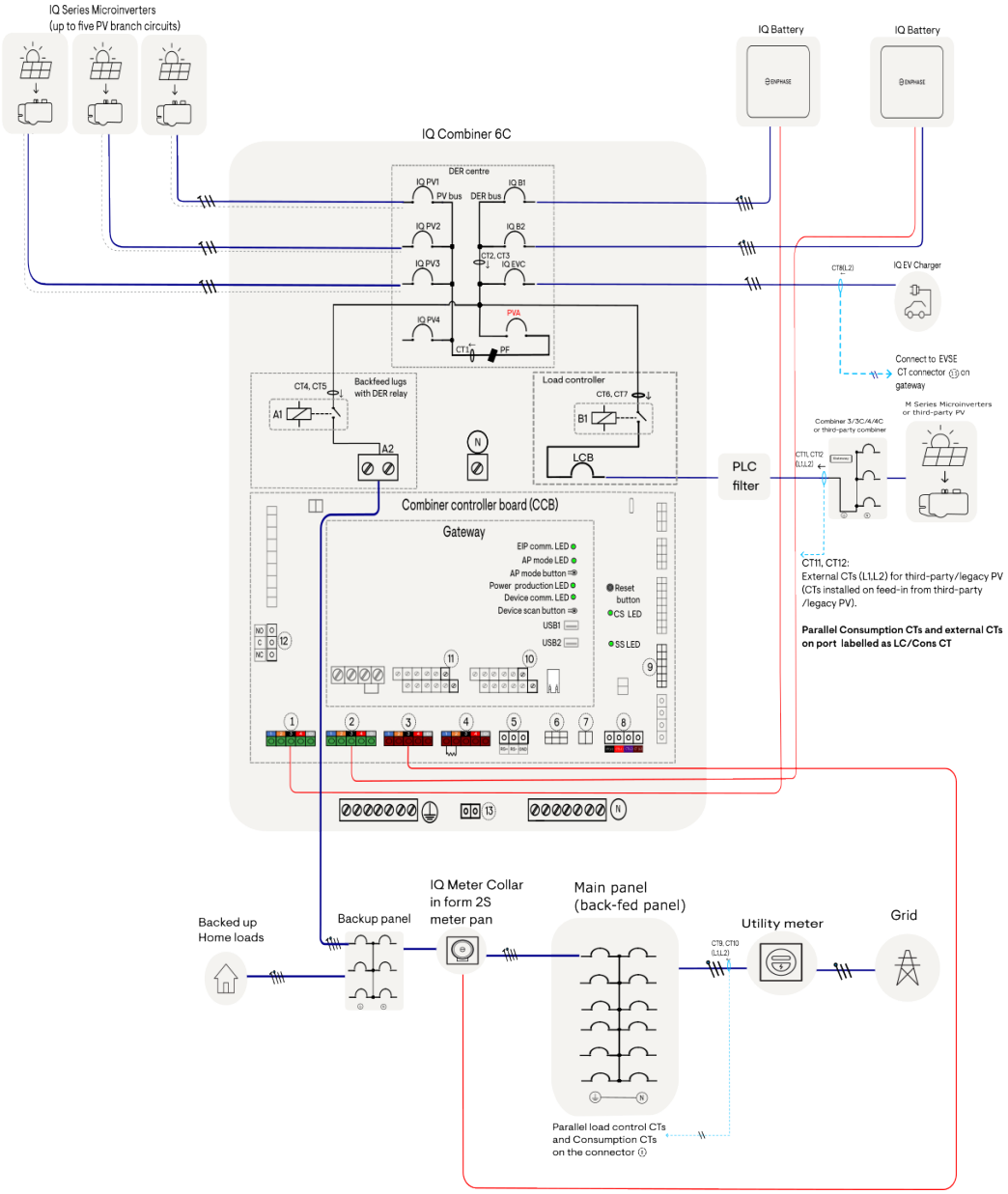

Figure 11: Grid-forming, Partial Home backup + legacy microinverters/third-party PV (IQ Meter Collar in a discrete meter pan)

For more information, see Consumption CTs wiring on page 28.

NOTE: The integrated gateway within IQ Combiner 6C does not support legacy Enphase PV or a third-party PV.

NOTE: The system may need a software upgrade during commissioning to support this configuration.

NOTE: Legacy Enphase PV systems (M Series, IQ6/IQ7/IQ8 Series) connected to the integrated load controller require a PLC filter to prevent communication interference between the two gateways. Refer to Appendix C for details on PLC filter.

24.2.7 Configuration 10 - Grid-forming - Whole Home backup with Enphase legacy combiner (with IQ Meter Collar behind the utility meter)

This configuration is ideal for homeowners with existing Enphase IQ Microinverters and a legacy combiner who want to ensure that all home loads remain powered during a utility grid outage.

The configuration necessarily requires the installation of an IQ Meter Collar. The IQ Meter Collar needs to be installed behind the utility meter, either on a meter-main combo or a separate utility meter.

NOTE: The IQ Meter Collar works as a microgrid interconnect device (MID) to enable backup. The installation of the IQ Meter Collar enables full home monitoring.

NOTE: The configuration requires utility authorization for the installation of the IQ Meter Collar behind the utility meter.

The IQ Combiner 6C includes an integrated load controller with built-in CTs, which can be used to connect additional loads removed from the back-fed panel or main panel.

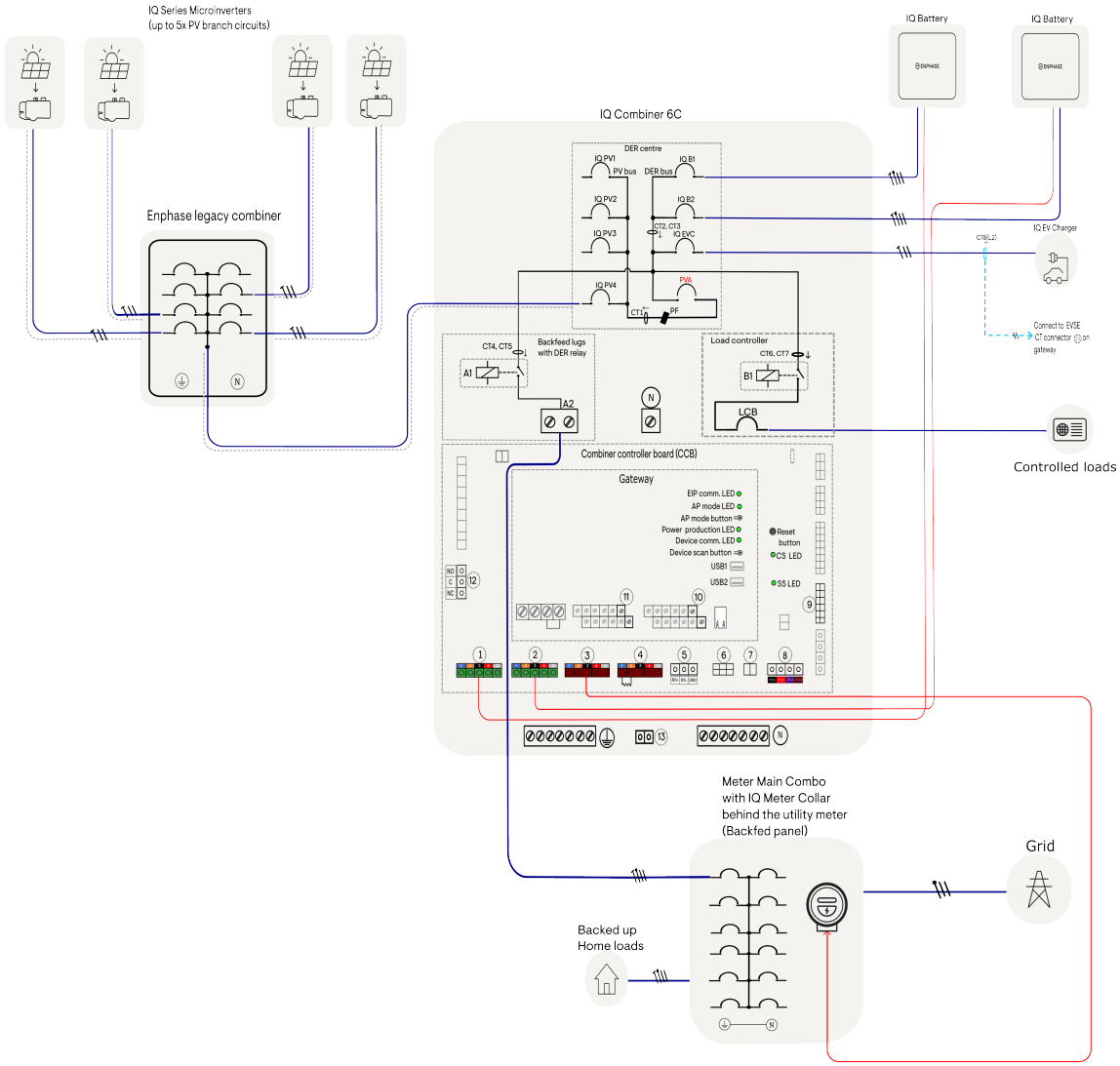

Figure 12: Grid-forming, Whole Home backup with Enphase legacy combiner (with IQ Meter Collar behind the utility meter)

24.2.8 Configuration 11a - Grid-forming - Whole Home backup for a 400 A site using more than one IQ Combiner 6C

- For systems with a 400 A supply-side connection, two IQ Combiner 6C units may be installed on the backfeed to the main panel.
- When installing multiple IQ Combiner 6C units at a site, a PLC filter must be used. The PLC filter is a separately sold SKU and should be selected based on the system's current rating.
- The PLC filter enables reliable communication between microinverters and their respective gateway.
- PLC filters must be installed to a separate PLC communication domains. Without PLC domain separation, communication interference can occur when two gateways communicate over the same bus.

Refer to Appendix C for more details on PLC installation

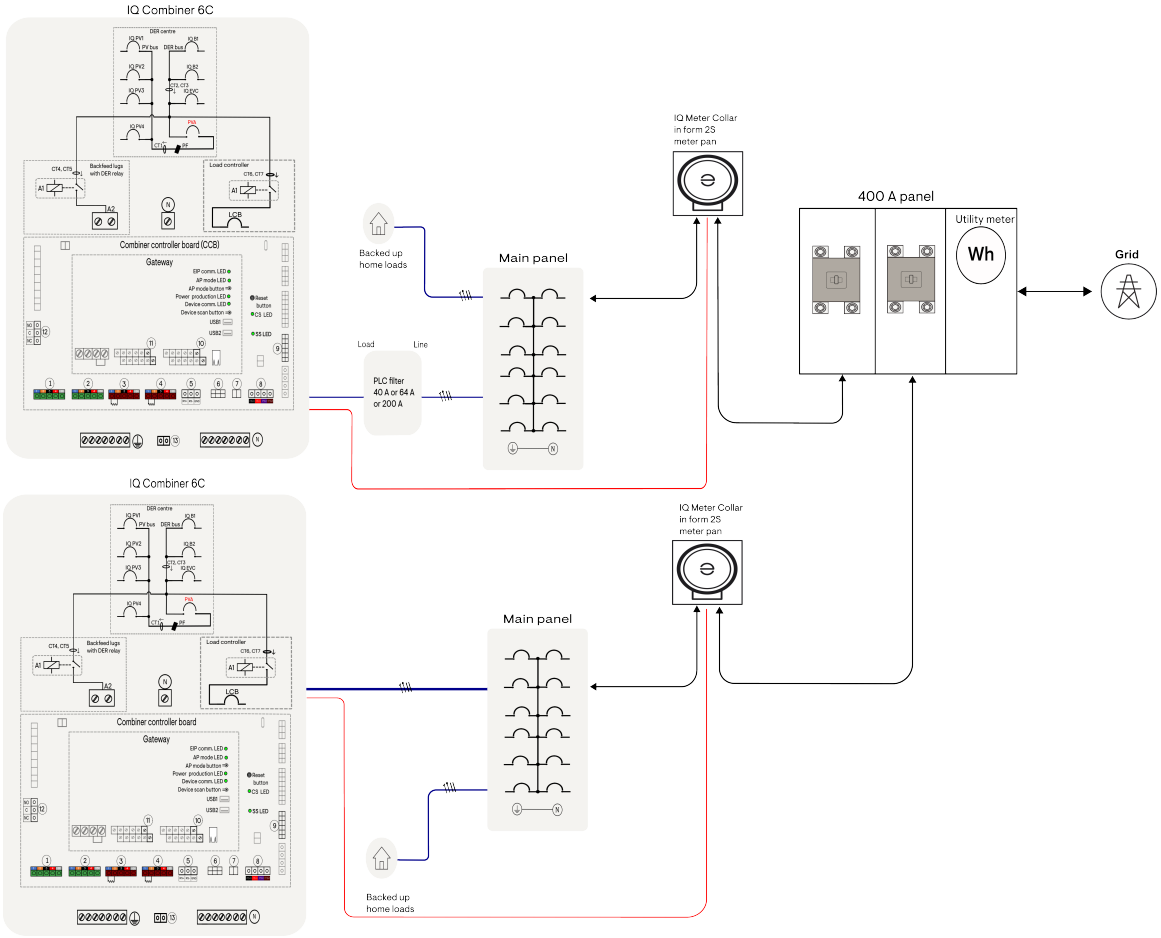

Figure 13: Grid-forming - Whole Home backup with more than one IQ Combiner 6C (400 A)

24.2.9 Configuration 11b - Grid-forming - Partial Home backup for a 400 A site using one IQ Combiner 6C

- For systems with a 400 A supply-side connection, one IQ Combiner 6C unit may be installed on the backfeed to the main panel.
- For Partial Home backup system with a 400 A supply-side connection, one IQ Combiner 6C can be installed on the backfeed of either main panel 1 or main panel 2.
- With one IQ Meter Collar used in a Partial Home backup system, Consumption CTs (L1 and L2) must be installed on each main panel.
- Ensure that the L1 Consumption CTs are connected in parallel and that the L2 Consumption CTs are connected in parallel.
- Connect the outputs of the Consumption CTs from both main panels in parallel (L1-to-L1 and L2-to-L2), and terminate the combined outputs at the load/ Consumption CT input on the IQ Combiner 6C.

For additional information, refer to the Consumption CTs Wiring section.

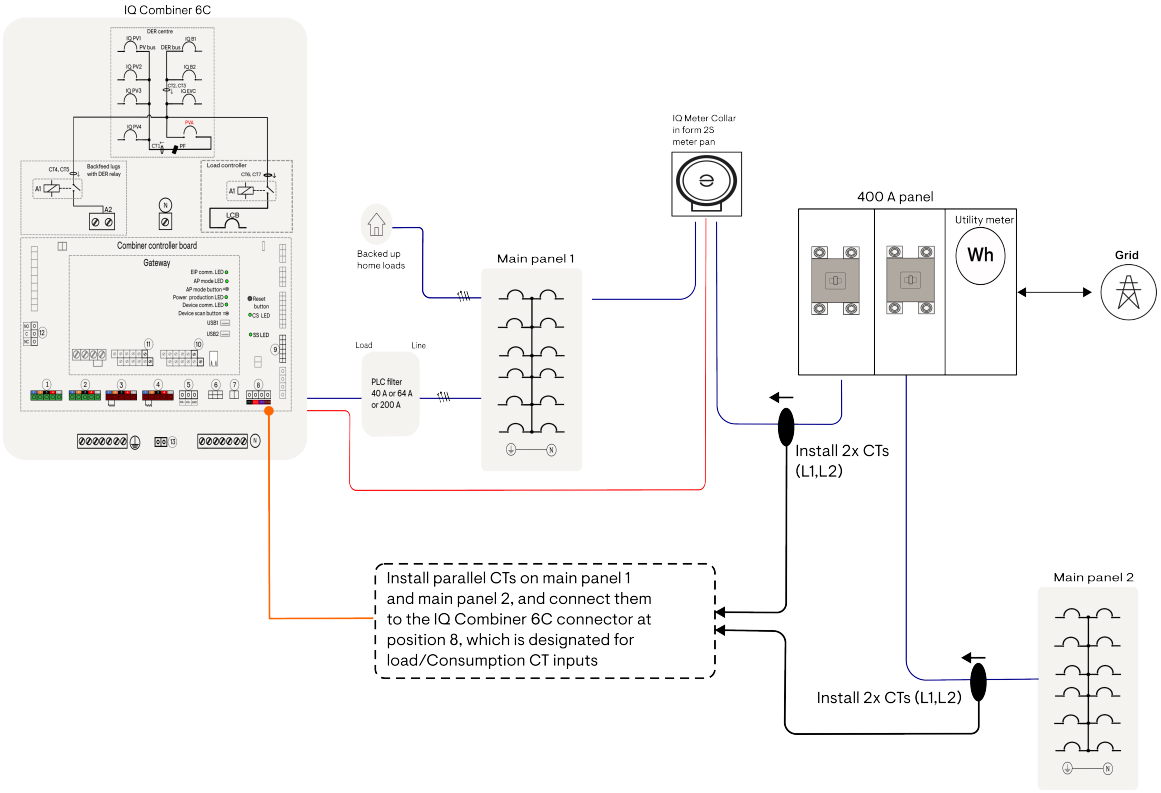

Figure 14: Grid-forming - Partial Home backup for a 400 A site using one IQ Combiner 6C

Revision history

Revision	Date	Description
140-00248-05	July 2026	• Added updated to the appendices. • Added Enphase System Shutdown Switch (applicable only for grid-forming – backup systems)" section. • Inclusion of 400A configuration in the appendix. • Inclusion of PLC filter and related recommendation. • Update to the Auxiliary wiring section. • Inclusion of Third party or Enphase additional/legacy wiring on the load controller space.
140-00248-04	January 2026	Added the following sections: • Configuration 7a - Grid-forming - Whole Home backup with supply-side connection • Method 1a: Parallel Consumption CTs • Auxiliary relays wiring • Installation of external DER meters Updated the "Wiring" section.
140-00248-03	August 2025	Updated ordering SKU: X-IQ-AM1-240-6C-3BRK.
	July	• Updated "Shutdown initiators and disconnect options" section. • Updated "Control wiring" section. • Updated "Wiring" section. • Inclusion of "Dimensions for conduit drilling zone" section.
140-00248-02	April 2025	Updated line diagrams.
140-00248-01	March 2025	Initial release.

Enphase Support: https://enphase.com/contact/support

This page is left blank intentionally.

This page is left blank intentionally.

This page is left blank intentionally.

140-00248-05-EN-2026-07-02
Applicable regions: North America

© 2026 Enphase Energy. All rights reserved. Enphase, the e and CC logos, IQ, and certain other marks listed at https://enphase.com/trademark-usage-guidelines are trademarks of Enphase Energy, Inc. in the U.S. and other countries. Data subject to change.

ENPHASE.