ENPHASE

ENGLISH

# IQ Meter Collar

## Quick install guide



Scan for the latest guide in your language

MODEL
MC-200-011-V01

VERSION 1.0
NOVEMBER 2025

140-00455-01

This page is left blank intentionally.

# Contents


1. Introduction 4

2. Specifications 5

3. Installation scenarios 7

4. Before installation 8

5. Installation: Whole home backup with IQ Meter Collar installed on utility meter-main combo panel or a separate utility meter socket 10

6. Installation: IQ Meter Collar installed on a separate non-utility meter socket 12

7. User interface 14

8. Control cable wiring and junction box installation 15

9. RMA of IQ Meter Collar 17

10. Safety 20

11. Appendix 21

12. Revision history 22

# 1. Introduction

The Enphase IQ Meter Collar is a meter socket adapter with an integrated microgrid interconnection device (MID) and current sensors for energy consumption metering. The IQ Meter Collar is rated at 200 A and can be installed on an ANSI C12 Form 2S meter socket rated up to 200 A for continuous operation. It can be installed either at the service entrance, directly on the utility meter socket, or on a load-side standalone meter socket.

The IQ Meter Collar is compatible with 3rd-generation Enphase Energy Systems, installed with IQ System Controller 3M, and IQ Battery 5P. It is also compatible with 4$^{th}$-generation Enphase Energy Systems installed with the IQ Combiner 6C and IQ Battery 10C.

IQ Meter Collar can be used in Enphase grid-interactive (grid-tied) as well as multi-mode (grid-forming) installations. In grid-interactive installations, the IQ Meter Collar serves as a consumption metering device, eliminating the need for additional CTs to be field-wired. In grid-forming installations, the IQ Meter Collar provides both consumption metering and grid isolation to enable microgrid formation.



**NOTE:**

- If installing on a utility meter socket, ensure that the IQ Meter Collar is approved by the local utility.
- The IQ Meter Collar is not compatible with all meter socket installations. Verify the meter socket installation complies with national and local electrical codes.
- Do not install the IQ Meter Collar with IQ System Controllers 2, 3, or 3G.
- These installation instructions do not cover all aspects of a renewable energy system.
- If you do not fully understand any of the concepts, terminology, or hazards outlined in these instructions, refer to a qualified electrician or installer.

# 2. Specifications

| Electrical specifications | |
|---|---|
| Nominal grid supply | 120/240 VAC/180°, split-phase |
| Nominal frequency | 60 Hz |
| Overvoltage category | Category IV (service entrance-rated) |
| Integrated consumption meter | ±0.5% accurate |
| Maximum continuous current rating | 200 A |
| Maximum short-circuit current withstand[1] | 22 kA |
| Maximum overcurrent protection device | 200 A |

| Mechanical specifications | |
|---|---|
| Dimensions | 6.9 in × 8.1 in × 5.0 in (175 mm × 206 mm × 128 mm) |
| Weight | 3.6 lb (1.63 kg) |
| Meter and meter socket interface | ANSI Form 2S, 200A, ringless, or ring type |
| Cooling | Forced convection cooled |

| Environmental specifications | |
|---|---|
| Operating ambient temperature range | –40°F to 122°F (–40°C to 50°C) |
| Enclosure environmental rating | NEMA 3R, Indoor/Outdoor |
| Maximum altitude | 8,200 ft. (2,500 meters) |

| Compliance | |
|---|---|
| Safety | UL 414 |
| Emissions (FCC) | CFR 47 Part 15B |

| System and grid compatibility | |
|---|---|
| Grid | UL 1741 SA/SB (IEEE 1547:2018), multi-mode |
| Power Control System (PCS) | Current sensor for a Power Control System under UL 3141 |

| Interfaces | |
|---|---|
| Control connector | 4-wire signaling with a 24 V DC power supply between system components |
| Manual override lever | Manually sets the MID relay state. Pull to open the MID relay, push to close the MID relay |
| Push button | Short press (7–10 seconds): Disable firmware control of MID, toggle again to enable firmware control of MID<br>Long press (>15 seconds): Hard reset of the unit. The relay state does not change |
| Light-emitting diodes (LED) | 1 Relay LED; 1 Control LED |

| Warranty | |
|---|---|
| Warranty | 15-year limited warranty |

| Enphase equipment compatibility | |
|---|---|
| IQ Gateway | ENV2-IQ-AM1-240, ENV-IQ-AM1-240 |
| Communications Kit | COMMS-KIT-02 |
| Microinverters | IQ8, IQ7, and IQ6 Series Microinverters |

[1] Short-circuit current limited by an external, load-side, overcurrent protection device.

| Enphase equipment compatibility | |
|---|---|
| 3rd-generation Enphase Energy System | IQ Battery 5P (IQBattery-5P-1P-NA), IQ Combiner 5 (X-IQ-AM1-240-5),<br>IQ Combiner 5C (X-IQ-AM1-5C), and IQ System Controller 3M (SC200D111CMC1US01) |
| 4th-generation Enphase Energy System | IQ Battery 10C (IQBATTERY-10C-1P-NA), IQ Combiner 6C (X-IQ-AM1-240-6C) |
| Third-party inverters and legacy Enphase microinverters[2] | Supported with a 4th-generation Enphase Energy System |

| What's in the box | |
|---|---|
| IQ Meter Collar | Meter collar adapter with microgrid interconnect device (MID) |
| Sealing ring | Sealing ring to prevent tampering or unauthorized removal of the utility watt-hour meter |
| Plastic bag | Plastic bag for installers to hang the IQ Meter Collar next to the utility watt-hour meter |
| Quick install guide (QIG) | IQ Meter Collar quick install guide (this document) |
| Accessories kit | One control connector; one junction box sub-assembly; two cable glands, 1/2" NPT (national pipe taper thread) |
| Blank cover plate | One blank cover plate is attached in front of the IQ Meter Collar |

| Tools/Additional items required[3] | |
|---|---|
| Arc flash personal protective equipment | Gloves, safety glasses, protective footwear |
| Tesco hot socket gap indicator | To ensure the meter socket jaws are not loose prior to installation |
| Meter puller | 6.2" diameter meter puller to safely remove the watt-hour meter from the meter socket |
| Torx driver with T20 tip | To fasten the junction box fasteners |
| Flathead screwdriver | To fasten the conductors to the terminals in the control connector |
| Conductor stripper | To strip the control cable outer jacket and insulation of 18 AWG conductors |
| Conduits (with fittings and fitting tools) | The control cable can be connected to the IQ Meter Collar junction box using a liquid-tight flexible system[4]. Alternatively, the control cable can be routed as an exposed run |
| Control cable | Length as required. Available from distribution/Enphase Store[5] |
| Form 2S meter socket | Required when the IQ Meter Collar is installed on a separate non-utility meter socket |
| Form 2S jumper cover | Required when the IQ Meter Collar is installed on a separate non-utility meter socket. Used to bypass the need for a watt-hour meter on the front of the IQ Meter Collar |

2 Third-party inverter support is under development and will be available soon.
3 The list of tools does not include the tools required to install the meter socket.
4 Certain utilities may not allow the use of liquid-tight flexible conduit. Please refer to the utility guidelines to ensure compliance.
5 Enphase Control Cable: CTRL-SC3-NA-01.

# 3. Installation scenarios

### Scenario 1A: Whole home backup with IQ Meter Collar installed on a utility meter-main combo panel

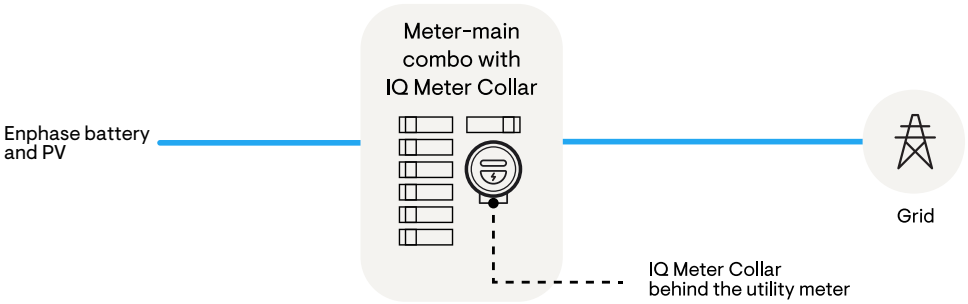


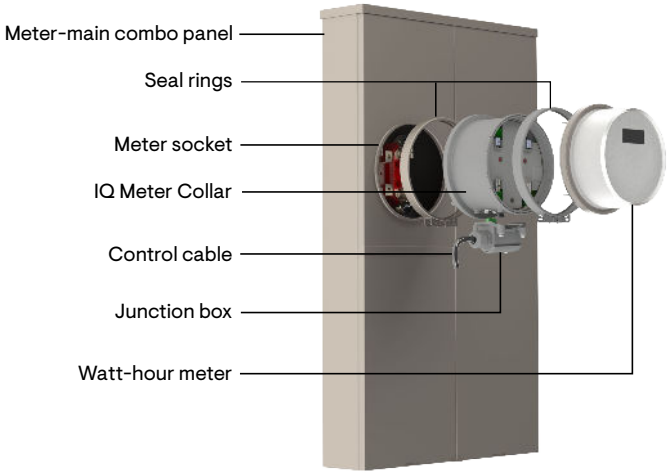


### Scenario 1B: Whole home backup with IQ Meter Collar installed on a separate utility meter socket

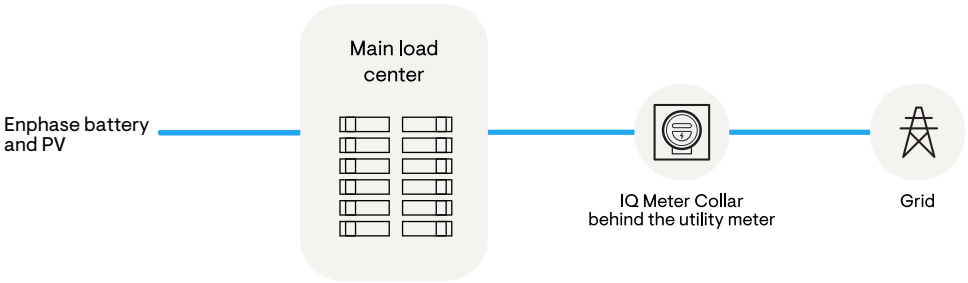


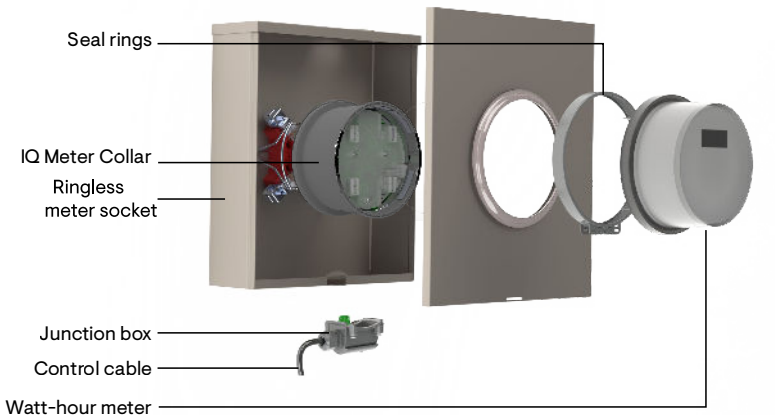

**Scenario 2A: Whole home backup with IQ Meter Collar installed on a separate non-utility meter socket**

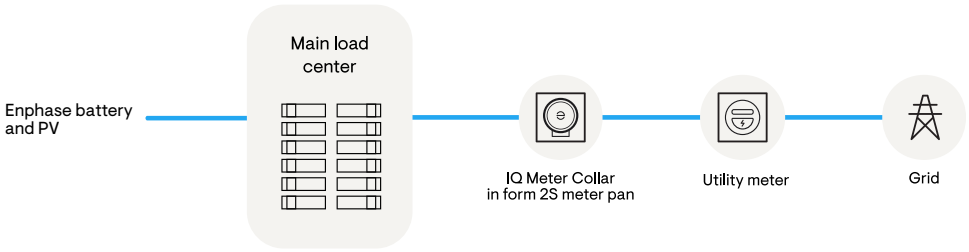


**NOTE:** When the IQ Meter Collar is installed on a separate non-utility meter socket, a jumper cover is required to bypass the need for a watt-hour meter. The AE Products meter socket jumper cover, part number JMP-BA-02S-01-01, and the Tesco meter socket jumper cover, catalog number 277-4, are recommended. Wherever possible, use ringed meter sockets to install the IQ Meter Collar on a non-utility socket. "An additional seal ring needs to be purchased for ringed meter sockets."

**Scenario 2B: Partial home backup with IQ Meter Collar installed on a separate non-utility meter socket**

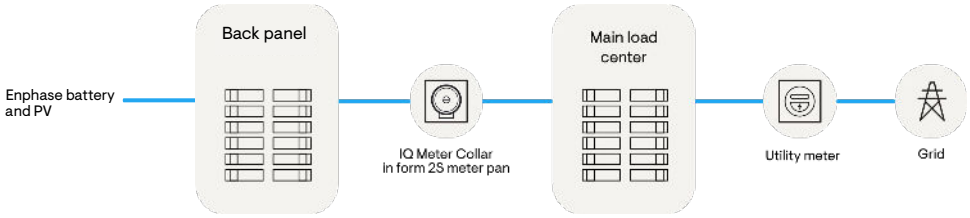


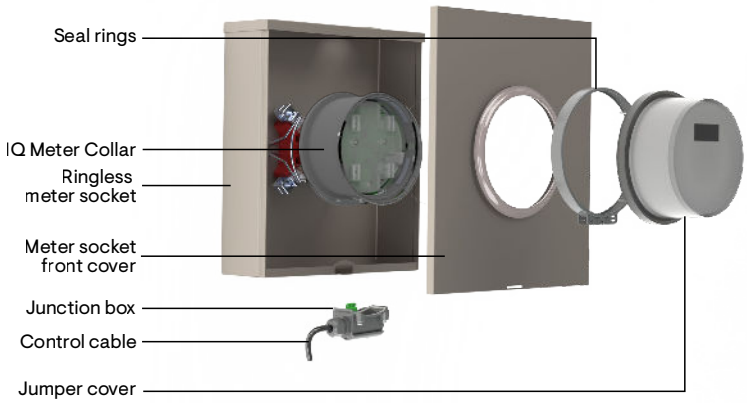


**NOTE:** When the IQ Meter Collar is installed on a separate non-utility meter socket, a jumper cover is required to bypass the need for a watt-hour meter. The AE Products meter socket jumper cover, part number JMP-BA-02S-01-01, and the Tesco meter socket jumper cover, catalog number 277-4, are recommended. Wherever possible, use ringed meter sockets to install the IQ Meter Collar on a non-utility socket. "An additional seal ring needs to be purchased for ringed meter sockets."

**NOTE:** In this configuration, the IQ Meter Collar measures energy consumed by loads connected to the backup panel.

# 4. Before installation

Before installation, perform the following checks.

### Check compatibility

- Determine if the local utility has approved the installation of an IQ Meter Collar on the utility meter socket.
- Determine if the IQ Meter Collar is compatible with the available grid voltage.
- Determine if the IQ Meter Collar is compatible with the utility meter socket.

**NOTE:** The following types of meter sockets are incompatible with the IQ Meter Collar:

- Non-Form 2S meter sockets

- Meter sockets that use clips to attach jaws to the busbar

**NOTE:** If another meter socket adapter is already installed, then the IQ Meter Collar cannot be installed.

**NOTE:** The junction box can be rotated for either the left or right entry of the control cable. For ganged meter sockets, ensure that the control cable does not obstruct any panel door from opening. This may mean that the IQ Meter Collar can be installed only in the top/bottom/left /right corner sockets. Do not bunch the control cable too much inside the junction box, as it could interfere with the movement of the MOR lever.

**NOTE:** The IQ Meter Collar should be installed with the side embossed 'UP' on the top and the junction box on the bottom. The grid supply must enter the collar from the top to ensure that the built-in consumption current sensors are oriented correctly. Ensure that the upper jaws of the meter socket are connected to the grid side, and the lower jaws are connected to the load side.

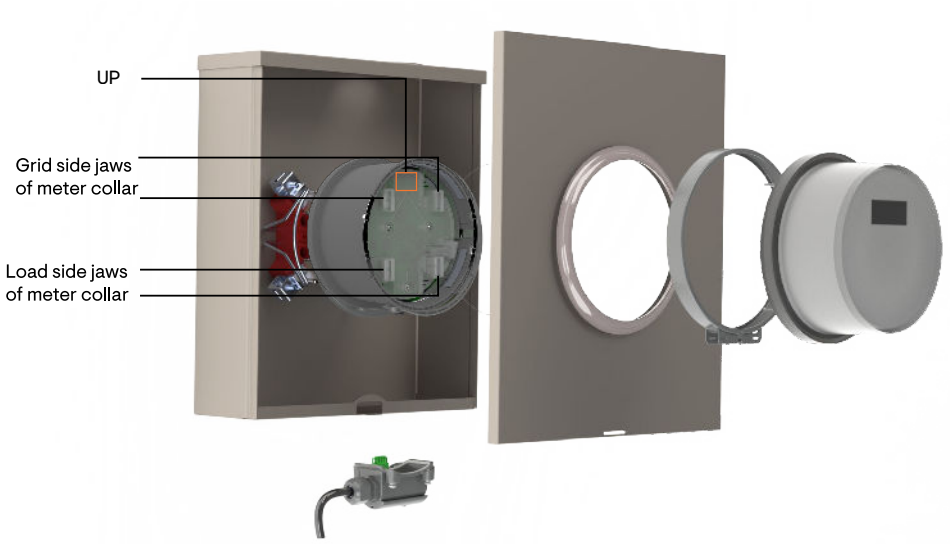


**NOTE:** The IQ Meter Collar must be installed with the junction box at the bottom. Ensure that the junction box does not obstruct any panel door below the meter socket from opening.

**NOTE:** For some ringless meter sockets, the socket cover must be inserted under a tab on top of the socket enclosure before sliding it over the IQ Meter Collar. In such cases, the socket cover may be obstructed by the junction box screw nut protrusions. Avoid using such meter sockets. Examples include the Milbank - U4801-XL-5T9.

**NOTE:** If the existing installation of the utility meter socket or meter-main combo panel is not compliant with local and national codes, then the utility may not allow the IQ Meter Collar to be installed.

**NOTE:** Installation of the IQ Meter Collar on a ringless meter socket may require temporary removal of the manual override lever and push button. Examples of compatible ringless meter sockets include the Eaton UTRS213CE. For more information, see the following sections.

**NOTE:** Utilities classify certain meter main combo panels and meter sockets as tap-to-tap connections. This implies that the jaws of the socket are, in turn, connected to a supply through another pair of jaws with clips inside the socket. Utilities may not allow the IQ Meter Collar to be installed in such sockets.

### Determine the installation scenario

- If the IQ Meter Collar is approved by the local utility and is suitable for installation at the premises, then select either scenario 1A or scenario 1B, depending upon the type of meter socket panel.
- If the IQ Meter Collar is not approved by the local utility, and the premise does not have a meter-main combo panel at the service entrance, then scenario 2A may be selected for whole home backup.
- If the IQ Meter Collar is not approved by the local utility, and the premise has a meter-main combo panel at the service entrance, then scenario 2B may be selected for partial home backup.

# 5. Installation: Whole home backup with IQ Meter Collar installed on utility meter-main combo panel or a separate utility meter socket

**Scenarios 1A and 1B**

**Steps 1-3 and Step 5 are to be followed by the installer.**

**Step 4 is to be followed by the utility.**

1. **Connect the control cable to the IQ Meter Collar.**
   a. Run the control cable either through a conduit or as an exposed run.

   **NOTE:** Some utilities may not allow Liquid-tight conduit for the control cable. Please check with the utility before installation.

   b. If a conduit is used, install fittings that ensure a flexible, liquid-tight conduit system.

   **NOTE:** Flexible conduit must be securely fastened within 12" of the IQ Meter Collar.

   c. If the control cable is routed as an exposed run, use the waterproof cable gland provided in the package. A spare cable gland is provided for waterproofing the far end of the control cable.

   d. Insert the control cable either in the cable gland or the conduit fitting and strip 1.5" of outer insulation. Ensure the far end of the control cable is free.

   **NOTE:** Do not strip the outer insulation beyond the minimum necessary length. Excess length of control conductors inside the junction box can interfere with the operation of the MID.

   e. Strip the conductors in the control cable to 5/16th of an inch and connect them to the control connector provided in the package.

   f. For ringed meter sockets, follow these steps:

      i. Insert the control connector into the control receptacle in the IQ Meter Collar.

      ii. Fasten the junction box to the IQ Meter Collar using a Torx driver with a T20 tip (Torque 1.2 N m/10 lb-in).

      For ringless meter sockets,

      i. Do not install the junction box or control connector before installing the IQ Meter Collar onto the meter socket.

2. **Insert the IQ Meter Collar assembly into the plastic bag.**

   Insert the IQ Meter Collar assembly (with the junction box and control cable in case of ringed meter sockets) along with the seal ring in the plastic bag provided with the package. If the meter socket is ringless, only the IQ Meter Collar, along with the seal ring, needs to be inserted into the plastic bag.

   Do not remove the blank protective cover in front of the IQ Meter Collar until it is inserted into the meter socket jaws. The blank cover helps prevent the live jaws on the front of the IQ Meter Collar from accidental contact while inserting it into a live meter socket.

**NOTE:** The blank cover helps prevent the live jaws on the front of the IQ Meter Collar from accidental contact while inserting it into a live meter socket. Do not remove the blank cover.

3. **Hang the plastic bag with the IQ Meter Collar near the utility meter socket.**

   Use the handle at the top corner of the plastic bag for hanging. The plastic bag with the IQ Meter Collar should be hung such that the control cable comes out of the spout or opening at the bottom corner. Then, connect the control cable to the IQ System Controller 3M or the IQ Combiner 6C.

**NOTE:** Do not hang the plastic bag using the control cable. This can damage both the control cable and the IQ Meter Collar.

4. **FOR UTILITY PERSONNEL**

   **Install the IQ Meter Collar behind the utility meter.**

**WARNING:** IQ Meter Collar can be installed behind the utility meter only by personnel authorized by the utility.

a. Turn off all service disconnects and the main breaker.

**WARNING:** Proceed with caution and always use PPE. If installing the IQ Meter Collar, even if all the disconnects are turned off, the jaws connected to utility service lines may still be energized.

b. For ring-type sockets, uninstall the seal ring. For ringless sockets, remove the meter socket front cover by sliding it over the watt-hour meter.

c. Remove the watt-hour meter using the meter puller. Follow the instructions provided by the meter puller manufacturer to safely remove the watt-hour meter from the meter socket.

**WARNING:** Make sure the following are available before removing the meter from the meter socket:

- Gloves, safety glasses, and protective footwear (personal protective equipment)
- Meter puller/grabber
- Tesco hot socket gap indicator



Grab the meter using a meter grabber



Pull the meter out of the meter socket

d. Visually inspect the meter socket jaws and ensure that there are no signs of arcing or damaged jaws.

e. Use the Tesco hot socket gap indicator to ensure meter jaws have adequate spring force and the jaw gap is not compromised. After inserting it into the meter socket jaw, the red indicator should not be visible.



PASS: The socket jaw has adequate spring force

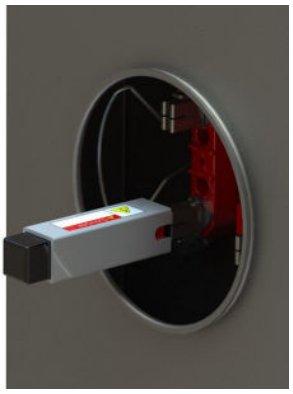

FAIL: The socket jaw has a significant loss of spring force

**WARNING:** If any meter jaw fails the hot socket gap indicator test, work with the customer and utility to get the meter socket replaced before installing the IQ Meter Collar.

**NOTE:** To ensure accuracy, use the Tesco hot socket gap indicator before the calibration due date.

f. Cut the plastic bag diagonally, starting from the opening at the bottom corner to the top corner. Remove the IQ Meter Collar from the plastic bag.

g. With the UP marking on the IQ Meter Collar facing up, insert the rear side four blades of the IQ Meter Collar into the meter socket.

**NOTE:** Do not remove the blank protective cover in front of the IQ Meter Collar until it is inserted into the meter socket jaws. The blank cover helps prevent the live jaws on the front of the IQ Meter Collar from accidental contact while inserting it into a live meter socket.

h. Remove the protective blank cover in front of the IQ Meter Collar. The blank cover may be discarded.

i. In case of a ringless meter socket, tilt the front cover of the meter socket slightly, then gently move it up and down to slide it over the IQ Meter Collar and complete the front cover installation.

j. With the watt-hour meter correctly oriented, insert the four blades on the watt-hour meter into the jaws in front of the IQ Meter Collar.

k. Secure the assembly with the seal ring(s). The sealing ring provided in the plastic bag must be used between the IQ Meter Collar and the utility watt-hour meter.

**NOTE:** The interface between the watt-hour meter and the IQ Meter Collar needs to be secured with a seal ring. You can use stainless steel screw-type seal rings. Stainless steel screw-type seal rings from Brooks Utility and Siemens are examples of compatible seal rings. "For ringed meter sockets, one more seal ring is needed between the IQ Meter Collar and the meter socket."

l. Before leaving the site, check the LED status. After installing the IQ Meter Collar on a ringed meter socket, both the control and relay LEDs will be solid red. For a ringless meter socket, the relay LED will be solid red, and the control LED will be off.

5. **Commission the IQ Meter Collar**.

   a. For ringless meter sockets, return to the site to install the control cable and junction box.

      i. Follow the instructions in step 1 and section 8 to install the control cable and junction box.

   b. Check the LED status after the control cable is installed. Both LEDs must be solid red.

   c. Perform functional validation of the IQ Meter Collar on-site using the Enphase Installer App or remotely through the Enphase Installer Portal.

Refer to point 5 of section 6 for adding the IQ Meter Collar in the Enphase Installer App.

# 6. Installation: IQ Meter Collar installed on a separate non-utility meter socket

**Scenarios 2A and 2B**

1. **Install the non-utility meter socket**.

   a. De-energize the grid supply to the home and turn off all PV and battery breakers and service disconnects.

   b. Install the meter socket (Form 2S, 4 jaws) of the appropriate current rating.

   c. For whole home backup

      i. Wire L1/L2/N from the utility meter socket to the line side terminals of the meter socket.

      ii. Wire L1/L2/N from the load side terminals of the meter socket to the main load center.

**NOTE:** Neutral is bonded to Ground in the main load center.

   For partial home backup

      i. Wire L1/L2/Ground from the main load center to the line side terminals of the meter socket.

      ii. Wire L1/L2/Ground from the load side terminals of the meter socket to the back load panel.

**NOTE:** Neutral is not connected to any terminal in the meter socket in a partial home backup scenario.

2. **Install the IQ Meter Collar**.

   For ringed meter sockets, follow these steps:

   a. Inspect the meter socket jaws to ensure they are not loose. If required, use a hot socket gap indicator.

   b. With the UP marking on the IQ Meter Collar facing up, insert the rear side four blades of the IQ Meter Collar.

   c. Remove the protective blank cover in front of the IQ Meter Collar. The blank cover may be discarded.

For ringless meter sockets, follow these steps:

a. Remove the front cover from the meter socket panel.

b. Inspect the meter socket jaws to ensure they are not loose. If required, use a hot socket gap indicator.

c. With the UP marking on the IQ Meter Collar facing up, insert the rear side four blades of the IQ Meter Collar into the meter socket.

d. Remove the protective blank cover in front of the IQ Meter Collar. The blank cover may be discarded.

e. Tilt the front cover of the meter socket slightly, then gently move it up and down to slide it over the IQ Meter Collar and complete the front cover installation.

⚠ **WARNING:** Do not remove the blank protective cover in front of the IQ Meter Collar until it is inserted into the meter socket jaws. The blank cover helps prevent the live jaws on the front of the IQ Meter Collar from accidental contact while inserting it into a live meter socket.

✓ **NOTE:** Proceed with caution and always use PPE. When installing the IQ Meter Collar, even if all the disconnects are turned off, the jaws connected to utility service lines may still be energized.

3. **Install the jumper cover.**

a. With the jumper cover correctly oriented, insert the four blades into the jaws in front of the IQ Meter Collar.

b. Secure the assembly with the seal ring(s). The sealing ring provided in the package must be used between the IQ Meter Collar and the jumper cover.

4. **Connect the control cable to the IQ Meter Collar.**

a. Run the control cable either through a conduit or as an exposed run.

b. If a conduit is used, install fittings that ensure a flexible, liquid-tight conduit system.

✓ **NOTE:** Flexible conduit must be securely fastened within 12” of the IQ Meter Collar.

c. If the control cable is routed as an exposed run, use the waterproof cable gland provided in the package. A spare cable gland is provided for waterproofing the far end of the control cable.

d. Insert the control cable either in the cable gland or the conduit fitting and strip 1.5" of outer insulation.

e. Strip the conductors in the control cable to 5/16th of an inch and connect them to the control connector provided in the package.

f. Insert the control connector in the control receptacle in the IQ Meter Collar.

g. Fasten the junction box to the IQ Meter Collar using the Torx driver with T20 tip (Torque 1.2 N m/10 lb-in).

5. **Commission the IQ Meter Collar.**

a. Scan the highlighted QR code from any of the labels shown below to add the IQ Meter Collar in the Enphase Installer App during commissioning. Manual entry should be used only when you are not able to scan the barcode or QR code of the device. The serial number barcode is also present on the packaging of the IQ Meter Collar. The images below are only for representation and show the location of the QR code on the IQ Meter Collar.



b. This label is laser printed on the IQ Meter Collar, above the LEDs.




This label is pasted inside the rim of the IQ Meter Collar.

c. Perform validation of the IQ Meter Collar using the Enphase Installer App.

# 7. User interface

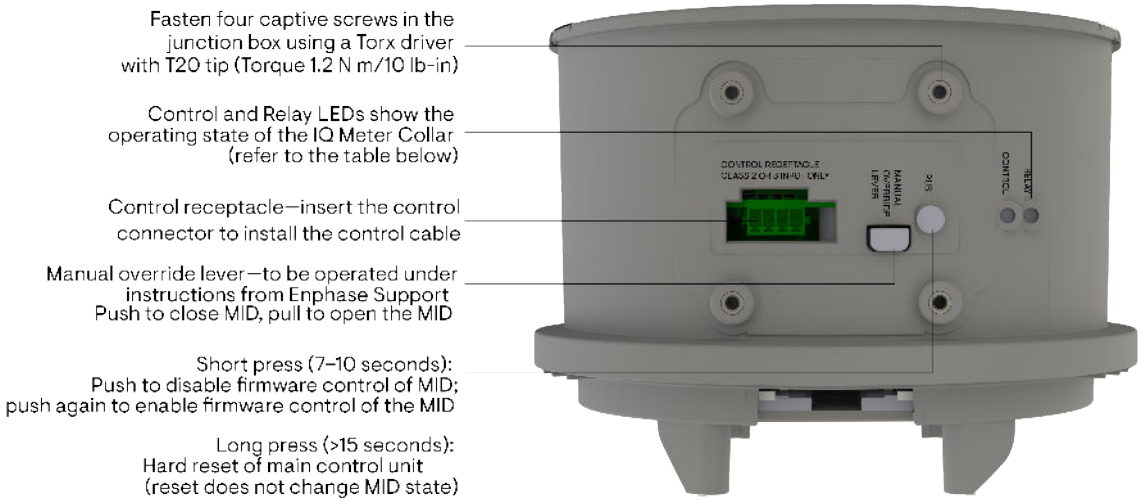


### LED indication for IQ Meter Collar operating state

*Table 1: Normal operation*

| Relay LED | Control LED | IQ Meter Collar state | Description |
|---|---|---|---|
| Red | Red | MID closed | Your system is currently linked to the utility grid, supplying power to your home through the grid. |
| Off | Red | MID open | Your system is running independently from the grid, and your home is being powered using solar or battery power. |
| Off | Slow blinking (1 second ON, 3 seconds OFF) | MID open; grid present | Your system is running in grid-agnostic mode, following a user command given through the Enphase App. Your home is being powered using solar or battery power. |

*Table 2: Error states*

| Relay LED | Control LED | IQ Meter Collar state | Description |
|---|---|---|---|
| Red | Blinking (1 second ON, 1 second OFF) | MID locked closed: firmware control disabled | The system is stuck in on-grid mode and can't switch to off-grid mode. Press and hold the push button for 7–10 seconds to reset. |
| Red | Off | MID closed; error | This is an error state caused due to communication loss, overheating, or an MID fault. Press the push button for 15 seconds to reset. If the error persists, contact Enphase Support. |
| Off | Blinking (1 second ON, 1 second OFF) | MID locked closed: firmware control disabled | The system is stuck in off-grid mode and can't switch to on-grid mode. Press and hold the push button for 7–10 seconds to reset. |
| Off | Fast blinking (0.25 seconds ON, 0.25 seconds OFF) | MID open; error | This is an error state caused due to overheating, or an MID fault. Press the push button for 15 seconds to reset. If the error persists, contact Enphase Support. |

| Relay LED | Control LED | IQ Meter Collar state | Description |
|---|---|---|---|
| Off | Off | No supply | The IQ Meter Collar is not powered. It may be unplugged or not receiving power. Check connections and contact support if the problem persists. |

**NOTE:**

- Communication loss is an error state, which is indicated by the OFF Control LED.
- After a successful hard reset of the main control unit of the IQ Meter collar, both the Relay LED and Control LED will blink rapidly (0.25 seconds ON, 0.25 seconds OFF) for 6 seconds.

**NOTE:**

- The manual override lever should not be used under normal operation.
- Contact Enphase Support before operating the manual override lever.
- All generation sources, such as PV and battery, which can back-feed power, should be powered off before operating the manual override lever.

## 8. Control cable wiring and junction box installation

1. Insert the control cable into the cable entry hole of the junction box.





2. Strip 1.5" of outer insulation of the control cable.
3. Strip insulation of individual conductors by 5/16".
4. Insert the stripped ends of the conductors into the terminal of the control connector per the color code.
5. Fasten the screws on the control connector (Torque 0.2 N m/1.77 lb-in).

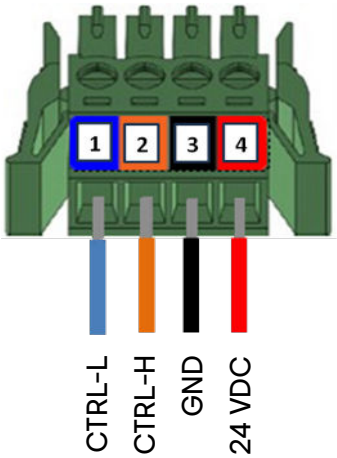

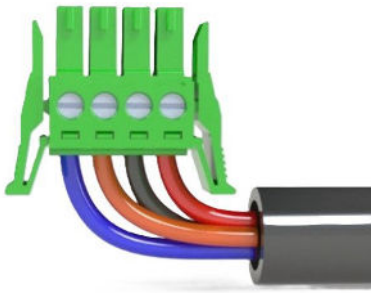

6. Flip the connector 180° before inserting it into the control receptacle in the IQ Meter Collar.
7. Pull the connector gently to ensure that it is securely latched into the receptacle.

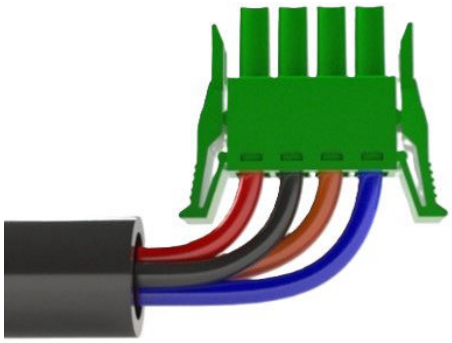

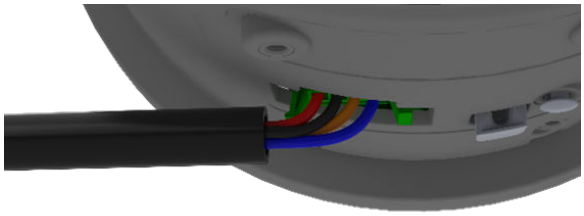

**NOTE:** The control receptacle connects to an external low-energy circuit using the control connector. It has a maximum voltage of 24 V DC and a maximum current of 0.5 A DC. The connector must be wired in accordance with the requirements of NFPA 70 for Class 2 and 3 circuits, in addition to any local requirements.

**NOTE:**

- A 120 Ω termination resistor is not required on the control connector used with the IQ Meter Collar.
- The drain wire must not be connected to any terminal on the IQ Meter Collar. The drain wire must be connected to the protective earth (PE) on the equipment at the far end of the control cable.
- The equipment at the far end could be IQ System Controller 3M for the 3rd-generation Enphase Energy System and IQ Combiner 6C for the 4th-generation Enphase Energy System.
- Refer to the IQ System Controller 3M or IQ Combiner 6C installation guide for further directions on connecting the control cable.

8. Slide the junction box assembly onto the mounting screw positions of the IQ Meter Collar and fasten the four mounting screws using the Torx driver with T20 tip (Torque 1.2 N m/10 lb-in).

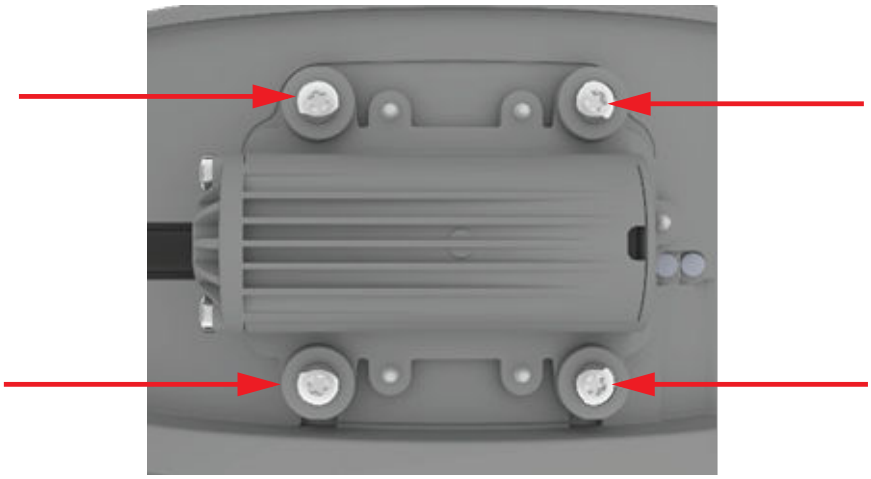

9. Fasten the two-cable grommet clamping screws using a Torx driver with a T20 tip (torque: 1.2 N m/10 lb-in).



**NOTE:** The junction box included in the packaging does not support liquid-tight conduits. To enable liquid-tight conduit support, please purchase ACC-MC-200-2, which is only compatible with ordering SKU MC-200-011-V01-2.

## 9. RMA of IQ Meter Collar

In the event of a fault, please contact Enphase Support. The entire unit of the IQ Meter Collar must be replaced in case of critical failure.

Steps to raise an RMA request:

1. Open the Enphase Installer App and select the system that has the device you need to replace.
2. Tap **Replacement and RMA Services**. Then, tap **Request RMA**.
3. Select the name and address of the person who will receive the replacement IQ Meter Collar. If you need to enter a new address, select **New Address**.
4. Use the **Request RMA** page to select the defective device serial number. In the comment box, describe the reason for requesting a replacement. Then, tap **Submit**.
5. Confirm the shipping address and tap **OK**. In the next message box, tap **OK** to complete the RMA request. You'll receive a confirmation email that includes a case number that you can use to track your request.

Before physically replacing the IQ Meter Collar, ensure the following:

1. Turn off the System Shutdown Switch or other rapid shutdown initiator to prevent the main panel from being backfed by the battery and PV during IQ Meter Collar replacement.
2. In the case of an IQ Combiner 6C, the PV aggregate breaker acts as the rapid shutdown initiator. Please turn it off before replacing the faulty IQ Meter Collar.
3. Turn OFF the IQ PV, IQ Battery, IQ EV Charger, and IQ Load Controller breakers in IQ Combiner 6C or IQ System Controller 3M or in electrical panels.

**NOTE:** In case the IQ Meter Collar is installed behind the utility meter, replacement must be carried out by utility personnel. Follow the steps outlined above before leaving the new IQ Meter Collar onsite for utilities to use.

After the new IQ Meter Collar is installed in the meter socket, follow the steps below:

1. Log in to the Enphase Installer App and search for the site using the **SITE NAME, SITE ID, ZIP CODE,** and so on.
2. Scroll down and go to **Services** > **Replacement and RMA Services** > **Replace Devices.**
3. Select **IQ Meter Collar.**

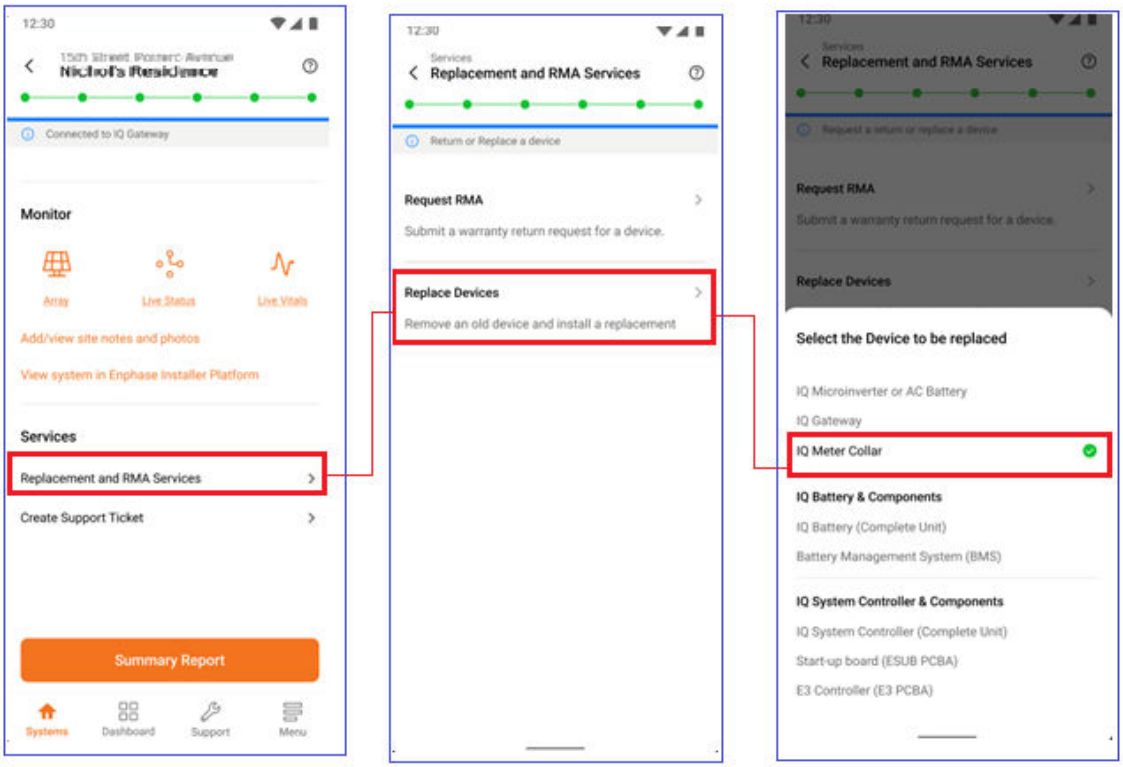


4. Enter the serial number of the old IQ Meter Collar by scanning the barcode/QR code. Manual entry should be used only when you are not able to scan the barcode or QR code of the device.
5. Tap **Submit** and ensure the provisioning of the new device is successful.

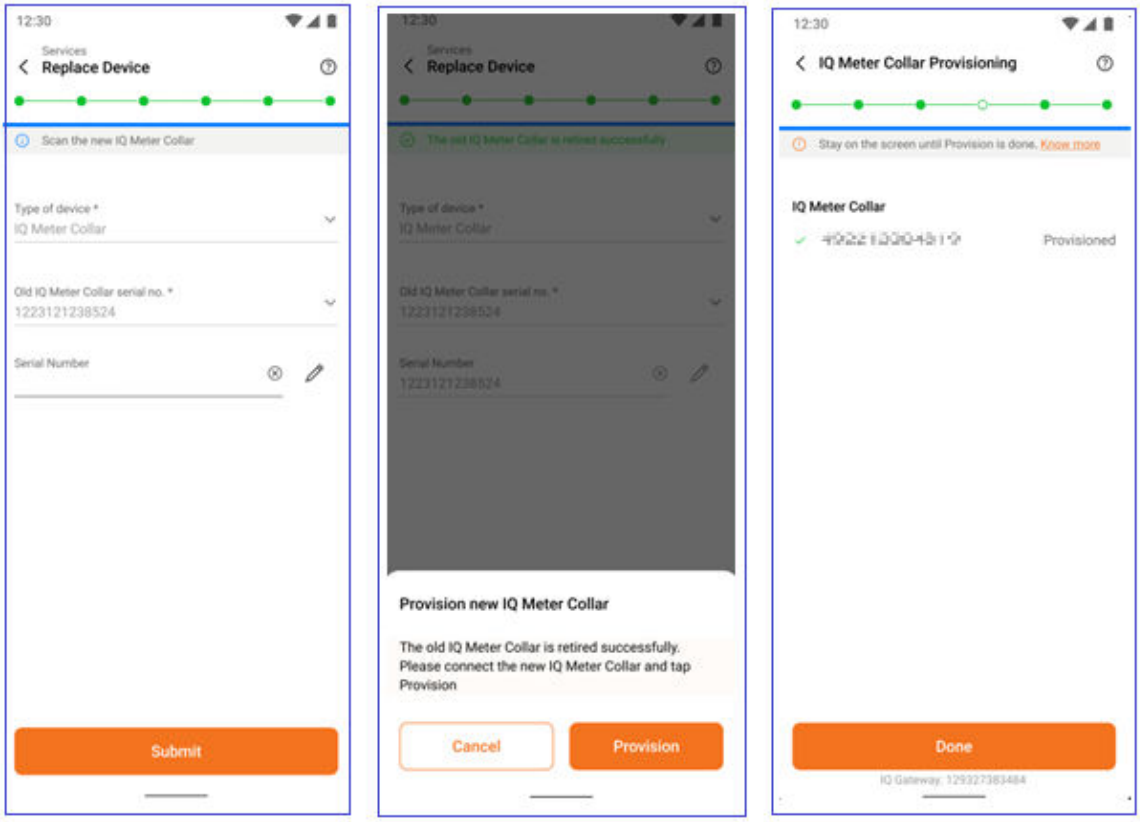


6. Turn ON the IQ PV, IQ Battery, IQ EV Charger, and IQ Load Controller breakers. Turn ON the System Shutdown Switch or other rapid shutdown initiator.

# 10. Safety

### Safety and advisory symbols

**DANGER:** This indicates a hazardous situation, which, if not avoided, will result in death or serious injury.

**WARNING:** This indicates a situation where failure to follow instructions may be a safety hazard or cause equipment malfunction. Use extreme caution and follow instructions carefully.

**NOTE:** This indicates information particularly important for optimal system operation. Follow instructions carefully.

### Safety instructions

**DANGER:** Risk of electric shock. Risk of fire. Before making any connections, verify that the circuit breaker(s) are in the off position. Double-check all wiring before applying power.

**DANGER:** Risk of electric shock. Risk of fire. Do not wire terminals or terminal blocks on the IQ Meter Collar.

**WARNING:** Risk of electric shock. To maintain the warranty, do not modify the IQ Meter Collar and install it as per the instructions provided in this installation guide.

**WARNING:** Before installing or using the IQ Meter Collar, read all instructions and cautionary markings in the technical description and on the equipment.

**WARNING:** This product is intended for operation in an environment having a maximum ambient temperature of 50°C (122°F).

**WARNING:** Only waterproof flexible conduit connections must be used to connect the control cable to the junction box.

**NOTE:** Perform all wiring per all applicable local electrical codes, with the Canadian Electrical Code, Part I, and with the National Electrical Code (NEC), ANSI/NFPA 70.

**NOTE:** Protection against lightning and resulting voltage surges must follow local standards.

**NOTE:** Using unapproved attachments or accessories could result in damage or injury.

**NOTE:** Install the meter socket in the field with 75°C or higher copper conductors sized per local code requirements and voltage drop/rise considerations.

**NOTE:** To ensure optimal reliability and to meet warranty requirements, the IQ Meter Collar must be installed according to the instructions in this guide.

**FCC Statement**: This equipment has been tested and found to comply with the limits for a Class B digital device, pursuant to part 15 of the FCC Rules. These limits are designed to provide reasonable protection against harmful interference in a residential installation.



### Environmental protection

ELECTRONIC DEVICE: DO NOT THROW AWAY. Waste electrical products should not be disposed of with household waste.

Proper disposal of the IQ Meter Collar is required. Refer to your local codes for disposal requirements.

# 11. Appendix

1. Utilities classify certain meter main combo panels and meter sockets as tap-to-tap connections. This implies that the jaws of the socket are, in turn, connected to a supply through another pair of jaws with clips inside the socket. Utilities may not allow the IQ Meter Collar to be installed in such sockets.

   For example, the utility **Southern California Edison** (SCE) does not allow installation of the IQ Meter Collar on the meter sockets mentioned below.

| Brand | Meter socket model number |
|---|---|
| Eaton/Cutler Hammer | MBED2040B200BF, MBED2040B225BF |
| | MBE1836B125BS, MBE1836B125BF |
| | MBED2040B200BFN, MBED2040B225BFN |
| | MBED3042B200BF, MBED3042B200BF6 |
| | MBED3042B200PV, MBED2040B200BS |
| | MBE2040B150BS, MBE2040B150BF |
| | MBE2040B150BTF, MBE2040B150BTS |
| | MBE2040B200BF, MBE2040B200BS |
| | MBE2040B200BTF, MBE2040B200BTS |
| | MBE2040BH200BTF, MBE2040BH200BTS |
| | MBED3042B200PV |

2. Some utilities may not allow a liquid-tight conduit for the control cable. Please check with the utility before installation.

   For example, the utility **Southern California Edison** (SCE) doesn't allow liquid-tight conduit for control cable.

3. During the installation of the IQ Meter Collar on a ringless meter socket.
   - If the MOR lever and push button interfere with the installation of the IQ Meter Collar on a ringless meter socket, gently remove both components by pulling them out from the collar.
   - Tape the MOR lever and push button to the junction box. Cover the openings created by their removal with adhesive tape.
   - After installation, the junction box—along with the control connector, MOR lever, and push button—will be reattached to the IQ Meter Collar. Ensure these components are not misplaced.
   - If the MOR lever and push button have been removed:
   - Position the MOR lever facing upward and gently push it into its designated opening. A clicking sound will confirm that the lever is securely reinstalled.
   - With the push button clamps positioned vertically, gently insert the push button into its opening. A click will indicate that the push button has been correctly reinstalled.

4. The junction box with ordering SKU MC-200-011-V01 supports liquid-tight conduits when used with a suitable ½'' liquid-tight conduit connector. It includes two cord grips—one for the cable entry hole of the junction box, and the other for the control cable entry of the Combiner 6C or the system controller enclosure.

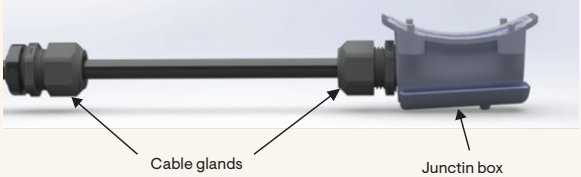


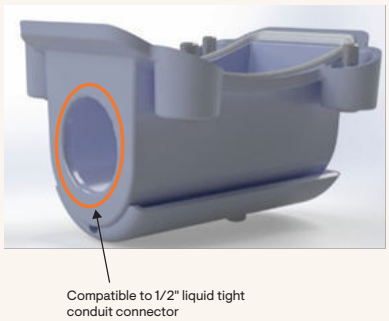

# 12. Revision history

| Revision | Date | Description |
|---|---|---|
| 140-00455-01 | November 2025 | Initial release. |

Enphase Support: https://enphase.com/contact/support

This page is left blank intentionally.

140-00455-01-EN-2025-11-07
Applicable regions: North America

© 2025 Enphase Energy. All rights reserved. Enphase, the e and CC logos, IQ, and certain other marks listed at https://enphase.com/trademark-usage-guidelines are trademarks of Enphase Energy, Inc. in the U.S. and other countries. Data subject to change.

ENPHASE.