IQ Battery 10C

The IQ Battery 10C all-in-one AC-coupled system is compact, powerful, reliable, and safe. It has a total usable capacity[1] of 10.0 kWh and includes four embedded, grid-forming microinverters with a 7.08 kVA continuous power rating. It provides backup capability, and installers can quickly design the right system size to meet the customer's needs.



Enphase 15 year limited warranty

Key specifications	IQBATTERY-10C-1P-NA
Rated (continuous) output power	7.08 kVA[1]
Rated output current (@240 V_{L-L} AC~)	29.5 A[1]
Rated neutral current (@120 V_{L-N} AC~)	24 A[1]
Interconnection	Single-phase
Nominal voltage	120/240 VAC~
Nominal frequency	60 Hz
Usable capacity	10.0 kWh[1]
Ambient operating temperature range (charging)[1]	–4°F to 122°F (–20°C to 50°C) Non-condensing
Ambient operating temperature range (discharging)[1]	–4°F to 131°F (–20°C to 55°C) Non-condensing
Chemistry	Lithium iron phosphate (LFP)
Mounting	Wall-mount or pedestal-mount (sold separately)

Product dimensions

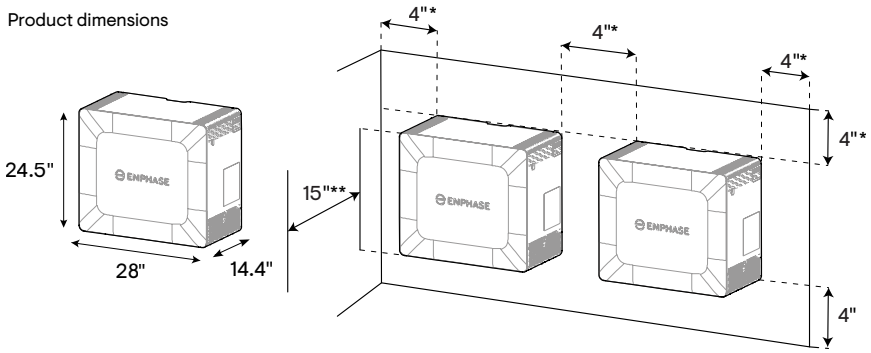

* The 4" clearances on the sides and the top are per the UL 9540A evaluation, Enphase recommends 8" for ease of service.
** Follow the local and national regulations while planning. A 15" clearance in the front is recommended for ease of service.

Powerful

- Provides 56 A peak current for three seconds
- Includes four embedded IQ8B Microinverters
- Most powerful microinverter with up to 2.1 kVA continuous power

Reliable

- Cools passively with no moving parts or fans
- Uses wired communication for fast and consistent connection
- Updates software and firmware remotely

Simple

- Fully integrated AC battery system with neutral forming capabilities
- Installs and commissions easily
- Offers homeowners remote monitoring and control from the Enphase App
- Field replaceable components

Safe

- Evaluated to UL 9540 A, the highest industry standard for battery safety
- Uses LFP chemistry for maximum safety and longevity

[1] Refer to the complete set of specifications on subsequent pages.

© 2026 Enphase Energy. All rights reserved. Enphase, the e and CC logos, IQ, and certain other marks listed at https://enphase.com/trademark-usage-guidelines are trademarks of Enphase Energy, Inc. in the U.S. and other countries. Data subject to change.

Product details	IQBATTERY-10C-1P-NA	
Name	IQ Battery 10C	
Description	The IQ Battery 10C system with integrated IQ Microinverters (SKU: IQ8BL, IQ8BN) with a battery management system (BMS) as part of IQBL Microinverters, includes: Two 5 kWh battery units. One IQ Battery 10C cover kit with cover, interconnect cables, and accessories.	
Model number	IQBATTERY-10C-1P-NA[2]	
Ordering SKU	Standard	Domestic
5 kWh battery unit	B05-C01-US00-1-3	B05-C01-US00-1-3-DOM
IQ Battery 10C cover kit	B10C-NC-0708-O	B10C-NC-0708-O-DOM

Limited warranty	
IQ Battery 10C unit	60% capacity, up to 15 years, or 6,000 cycles[3]

Output (AC~)	@240 VAC[4]
Rated (continuous) output power	7.08 kVA[5]
Maximum continuous discharge rates (MCDR)	7.08 kW
Nominal voltage/range	240/211–264 VAC~
Nominal frequency/range	60/57–63 Hz
Rated output current (@240 V_{L-L}AC~)	29.5 A[5]
Rated neutral current (@240 V_{L-N}AC~)	24 A[6]
Peak output current (@240 V_{L-L}AC~)	56 A (three seconds), 44.8 A (ten seconds)
Power Start capability	Up to 90 A LRA[7]
Power factor (adjustable)	0.85 leading ... 0.85 lagging
Maximum conductor size supported	3 AWG
Overcurrent protection device (OCPD)	40 A OCPD requires a minimum of 8 AWG for one IQ Battery 10C or 80 A OCPD requires a minimum of 4 AWG for two or more IQ Battery 10C[8]
Interconnection	Single-phase
AC round-trip efficiency[9]	90%

Battery	
Total capacity[10]	10.0 kWh
Usable capacity[11]	10.0 kWh
DC round-trip efficiency	96%
Nominal DC voltage	76.8 V
Maximum DC voltage	86.4 V

[2] The model number is used on the product nameplate, Certificate of Compliance, and in official regulatory listings (e.g., California Energy Commission). For all interconnection applications and permitting processes, ensure that the model number is used, not the ordering SKU.
[3] Whichever occurs first. Restrictions apply.
[4] Supported in both grid-connected and backup/off-grid operations.
[5] 7.08 kVA, 29.5 A for the balanced 240 V_{L-L} loads.
[6] A maximum of 24 A, 120 V_{L-N} unbalanced loads can be supported along with 5.5 A, 240 V $_{L-L}$ loads.
[7] Power Start capability may vary.
[8] More than two IQ Battery 10C on a 4 AWG circuit protected by 80 A OCPD requires setting Power Control System: IQ Battery Oversubscription.
[9] AC to the battery to AC at 50% power rating.
[10] The IQ Battery 10C is typically shipped with a state of charge (SoC) between 20% and 30% to ensure safe transportation and optimal battery health during storage and handling.
[11] The battery's usable capacity supports loads and turns PV on (when off-grid), in normal daily operation. The usable capacity includes a safety-critical limit of 2% that safeguards the customer's asset in case of a long-duration grid outage. An additional 3% capacity is maintained for battery electronic sustenance at night. Refer to https://link.enphase.com/iqbattery_usable_capacity_en_na for more information.

Battery	
Ambient operating temperature range (charging)[12]	–4°F to 122°F (–20°C to 50°C) non-condensing
Ambient operating temperature range (discharging)[13]	–4°F to 131°F (–20°C to 55°C) non-condensing
Optimum operating temperature range	32°F to 86°F (0°C to 30°C)[14]
Chemistry	Lithium iron phosphate (LFP)

Mechanical data	
Dimensions (H × W × D)	24.5 in × 28 in × 14.4 in (621 mm × 708 mm × 365 mm)
Maximum lifting weight	125 lb (57 kg)
Total installed weight	317 lb (144 kg)
Enclosure	Outdoor-NEMA 3R
Cooling	Natural convection
Operating noise @1 m	<33 dBA
Altitude[15]	Up to 9,842 ft (3,000 m)
Mounting	Wall-mount or pedestal-mount (sold separately)

Features and compliance	
Compatibility	Compatible with IQ Microinverters and M Series Microinverters, IQ Meter Collar, IQ Combiner 6C, and IQ Gateway for grid-tied and backup operations.
Communication	Wired control communication
Services	Backup, Self-Consumption, TOU, and NEM integrity
Monitoring	Enphase Installer Platform and Enphase App monitoring options; API integration
Compliance	CA Rule 21 (UL 1741-SA), IEEE 1547:2018 (UL 1741-SB, 3rd Ed.) CAN/CSA C22.2 No. 107.1-16 UL 9540[16], UL 9540 A[17], UN 38.3, UL 1998, UL 991, NEMA Type 3R, AC156 EMI: 47 CFR, Part 15, Class B, ICES 003 Cell module: UL 1973, UN 38.3 Inverters: UL 62109-1, IEC 62109-2

What's in the box	
A total of three boxes: Two boxes contain the 5.0 kWh battery units, and the third box contains the IQ Battery 10C cover kit.	
5.0 kWh battery unit	
Battery units	Two 5.0 kWh battery units of IQ Battery 10C
Mounting bracket	Two mounting brackets for mounting the batteries on the wall
Seismic screws	Four seismic screws for securing the battery unit on the mounting bracket
Mounting bracket fasteners	Twelve M8 hexagonal Phillips screws with washers for mounting the second wall bracket on the preinstalled battery unit
Drill template	Two drill templates to mark drilling points and conduit entry locations on the wall

[12] A reduction in charging power occurs at temperatures below 59°F (15°C) and above 113°F (45°C).
[13] A reduction in discharging power occurs at temperatures below 32°F (0°C) and above 122°F (50°C).
[14] Keeping the battery in this temperature range maximizes the battery life.
[15] Refer to the data sheet for all components used with the IQ Battery 10C to determine the maximum altitude. For example, the IQ Battery 10C has a maximum altitude limit of 3,000 meters, while the IQ Meter Collar has a limit of 2,500 meters. When used together, the maximum altitude is restricted to 2,500 meters.
[16] Following local standards, choose a non-habitable indoor location (like a 2-car garage) or an outdoor location where the ambient temperature and humidity are within –4°F to 131°F (–20°C to 55°C) and 5% to 95% RH, non-condensing. Avoid direct sunlight to ensure the temperature stays in the optimal operating range. This ensures charging and discharging currents are not derated due to temperature.
[17] Evaluated to UL 9540 A for thermal runaway fire propagation and reduced separation distance as required in 2021 IRC R328.3.1, 2021 IFC 1207.1.5, and 2023 NFPA 855 15.3.1 and 9.1.5. Follow all installation instructions and local codes and requirements of the Authority Having Jurisdiction (AHJ) when installing the Enphase Energy System.

What's in the box	
IQ Battery 10C cover kit	
Cover	One cover for IQ Battery 10C
Interconnect power cable	One interconnect power cable assembly for internally connecting two battery units of IQ Battery 10C
Interconnect control cable	One interconnect control cable assembly for internally connecting two battery units of IQ Battery 10C, with one preinstalled control connector (without a resistor) at one end
Control connector with resistor	One spare control connector with a resistor for control wiring
Raceway adapter	Two raceway adapters for routing cables internally between two battery units
Cable holder	Two cable holders for cable management in wiring compartments
Conduit covers	One left-side and one right-side conduit cover to close unused conduit openings
Cover locking screw	Four cover locking screws for securing the covers
Quick install guide (QIG)	QIG for IQ Battery unit installation instructions

Optional accessories and replacement parts	
IQ8BL-RMA	IQ8BL Microinverter for field replacement
IQ8BN-RMA	IQ8BN Microinverter for field replacement
B05-C01-US00-1-3-RMA	IQ Battery 10C 5.0 kWh battery unit for field replacement
B10C-CX-0709-O	IQ Battery 10C cover for field replacement
B05C-WB-0662-O	IQ Battery 10C wall bracket for field replacement
B10C-PI-0550-O	IQ Battery 10C Pedestal Mount
B05C-LH-0180-O	IQ Battery 10C Lifting Handles. Includes one left-side and one right-side lifting handle
B05C-ACFB-0138-O	IQ Battery 10C AC filter board for field replacement
B05C-NCANB-068-O	IQ Battery 10C control communication board for field replacement
B05C-CS-0161-O	IQ Battery 10C control switch for field replacement
B05C-NLTB-051-O	IQ Battery 10C live and neutral terminal block for field replacement
B05C-NGTB-051-O	IQ Battery 10C ground terminal block for field replacement
B05C-NJTB-027-O	IQ Battery 10C jumper for the terminal block for field replacement
B05C-NETB-049-O	IQ Battery 10C end stop and end cap for the terminal block for field replacement
B10C-PIC-0350-O	IQ Battery 10C interconnect power cable for field replacement
B10C-CIC-0300-O	IQ Battery 10C interconnect control cable for field replacement
B05C-CP-031-O	IQ Battery 10C conduit plug (large) for field replacement
B05C-CP-026-O	IQ Battery 10C conduit plug (small) for field replacement
B05C-CH-0132-O	IQ Battery 10C cable holder for field replacement
B10C-RA-050-O	IQ Battery 10C raceway adapter for field replacement
B05C-CC-090-O	IQ Battery 10C conduit cover for field replacement
B05C-WC-0620-O	IQ Battery 10C wiring cover for field replacement
B05C-CAT-0100-O	IQ Battery 10C internal cables to connect AC filter board and terminal blocks

Components of the Enphase Energy System



IQ Microinverters

IQ Series Microinverters pack more power into less space than other rooftop solar systems and make rooftop solar more productive, reliable, smart, and safe.



IQ Combiner 6C

IQ Combiner 6C consolidates interconnection equipment into a single enclosure and streamlines IQ Series Microinverters and IQ Battery 10C installation by providing a consistent, pre-wired solution for residential applications.

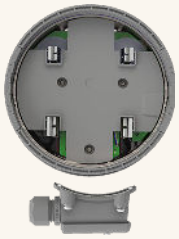

IQ Meter Collar

IQ Meter Collar enables full home backup with IQ Battery 10C, Enphase PV, and IQ Combiner 6C.



IQ Battery 10C accessories

IQ Battery 10C Lifting Handles are reusable and ease the installation process. The IQ Battery 10C Pedestal Mount enables floor mounting of the IQ Battery 10C.

Revision history

Revision	Date	Description
DSH-00565-10.0	July 2026	Editorial updates.
DSH-00565-9.0	February 2026	Updated the introduction.
DSH-00565-8.0	December 2025	Updated the “Mechanical data” section.
DSH-00565-7.0	September 2025	Updated the product description.
DSH-00565-6.0	July 2025	Added the domestic SKUs.
DSH-00565-5.0	July 2025	• Updated the description of the “Product details” section. • Added a note to the total capacity in the “Battery” section.
DSH-00565-4.0	May 2025	• Updated the peak current. • Updated the discharging power temperature range. • Added the footnote in the altitude data. • Two additional SKUs were added to “Optional accessories and replacement parts”. • Updated the clearance dimensions from 6" to 4" in the product dimensions image.
DSH-00565-3.0	March 2025	Editorial updates.
DSH-00565-2.0	February 2025	Updated the specifications for order code details.
DSH-00565-1.0	November 2024	Preliminary release.