



Cloud Connect Advanced (CCA) and Accessories Kit

Data logger/gateway, Tigo Access Point (TAP), power supply, and outdoor enclosure options

The Cloud Connect Advanced (CCA) is a compact, powerful data logging and communications gateway that powers the monitoring and safety capabilities of Tigo TS4 module level power electronics (MLPE). CCA Kit options provide all the components needed for communicating between inverters, TAPs, TS4s, and the Tigo Energy Intelligence platform.

CCA

- Enables module-level monitoring through the Tigo cloud platform
- Connects to wired and wireless networks
- Includes a multifunction LED status indicator
- Configured and commissioned with the Tigo Energy Intelligence (EI) app
- Monitors 3rd-party devices via Modbus

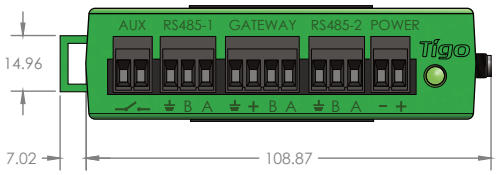

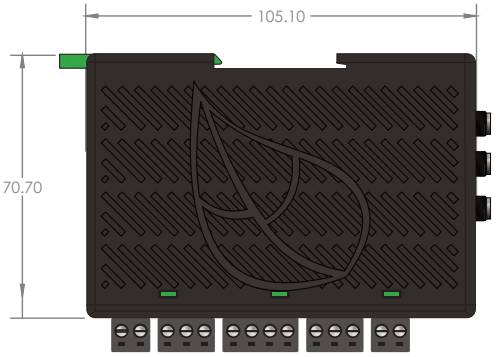

TAP

- Collects data from up to 300 TS4s
- Wireless mesh communication
- Scalable architecture
- Mounts easily on module frames without tools

Power Supplies/Outdoor Enclosure

- Outlet and DIN rail power-supply options
- Compact, DIN rail design
- IP67, NEMA 4 rated enclosure

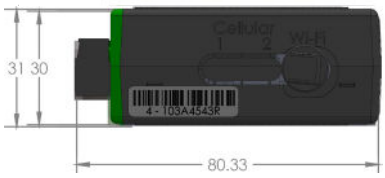

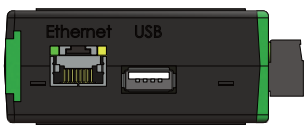

tigoenergy.com

©20260727 Tigo Energy, Inc. 002-00140-00 Rev. 1.4

Specifications

CCA

Input voltage	2 TAPs or fewer: 12-24V_{DC} ±2% 3 TAPs or more: 24V_{DC} ±2%
Input current	1 A
Power consumption (up to 7 TAPs)	3 – 10 W
Dimensions (W/D/H)	31 x 115.5 x 71.5 mm (1.2 x 4.5 x 2.8 in)
Weight	126 g (0.28 lbs)
Operating temperature range	-20 – 85°C (-4 – 185°F)
Maximum altitude	3000 m (9840 ft)
Cooling	Natural convection

TAP

Operating temperature range	-20 – 85°C (-4 – 185°F)
Environmental rating	IP68/NEMA 4X

Power Supplies/Outdoor Enclosure

Operating temperature range	-20 – 70°C (-4 – 185°F)
Input voltage	50/60Hz, 100 – 240 V_{AC}
Power consumption (up to 7 TAPs)	3 – 15 W
Dimensions (W/D/H)	203 x 115 x 278.4 mm (8 x 4.5 x 11 in)
Weight (w/CCA and power supply)	1.1 kg (2.4 lbs)
Environmental rating	IP67/NEMA 4X
Cooling	Natural convection

Includes DIN rail mountable bracket*

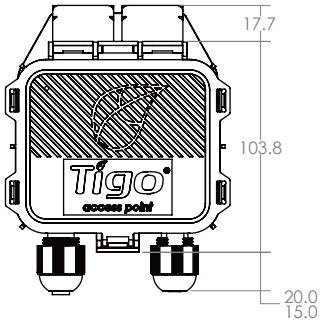



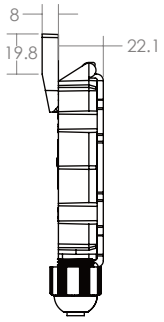

Ordering Information

344-00000-52	CCA Kit with TAP, DIN rail power supply*
348-00000-52	CCA Kit with TAP, DIN rail power supply, outdoor enclosure*
346-00000-00	CCA standalone

Additional Resources

Tigo TAP | Downloads | Tigo CCA | Support